Thermocouple



Engineering Thermocouple Solution

Thermocouple wire
Thermocouple connector
Thermocouple head
Digital thermometer

ZONZEN



Company Introduction

Zonzen Electric Co.,Ltd. is one of the leading thermocouple components manufacturer in China. Established in 1996, and gained ISO-9001 certificate in 2000. Our product lines include thermocouple wires, thermocouple connectors, thermocouple heads and digital thermometer etc. And all our products are conformed to ANSI, IEC & JIS standard.

“Total Quality Assurance and Customer Satisfaction" are the central goals of our company. Because of the reliable product quality, competitive price and punctual delivery, we have earned a good reputation from our customers all over the world. What’s more, Zonzen enjoyed an average of 28% sales growth in the past years.

With our professional engineers, advanced equipment, strict quality control process, and over 10 years experience in designing, manufacturing and distributing in temperature sensors, we strongly believe we can provide our valued customers the best CQTS (Cost, Quality, Delivery Time, Service).

Thanks for all customers' kind support and would like the opportunity to become your long-term partner in China.

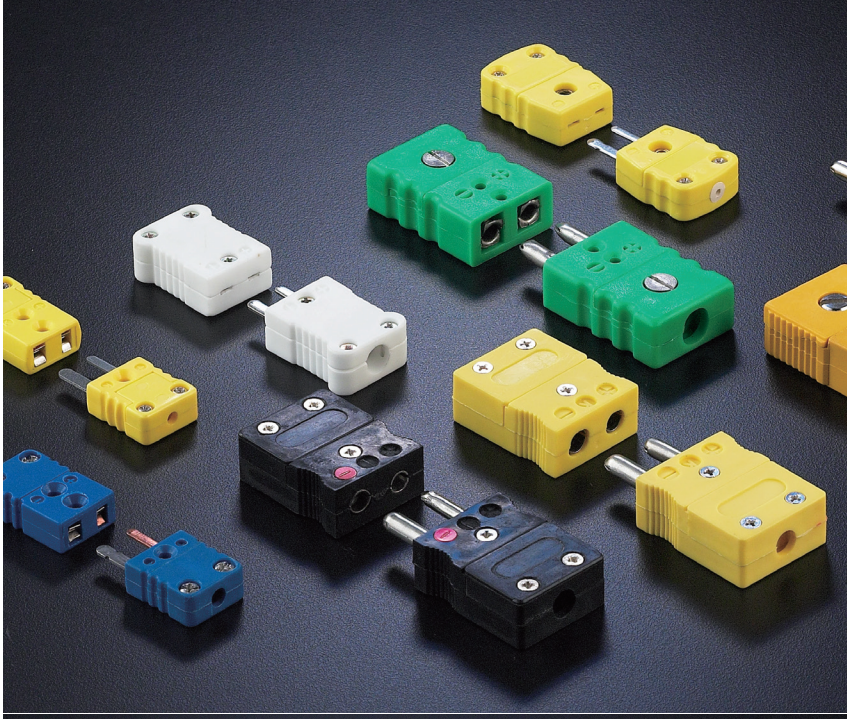




82 II THERMOMETER
T1
82.0 °C
08:02
Hour: min
T2
82.0
TYPE K
SHIFT
°C / °F
HOLD
MAX MIN
CLEAR MEMORY
LOGGING
SETUP
RECALL
ENTER
21.5 °C
POWER
0.1°
HOLD
1.0°
°C
°F
TYPE K
TM6801B
(-50°C~1300°C)
OFFSET

ZONZEN

Product Conents

Thermocouple Wire

Thermocouple Wire ---- 1
PVC Insulated Thermocouple & Extension Wire (PVC-PVC) ---- 2-3
Fiberglass Braided Insulated Thermocouple & Extension Wire (FB-FB) ---- 4-5
FEP Insulated Thermocouple & Extension Wire (FEP-FEP) ---- 6-7
PFA Insulated Thermocouple & Extension Wire (PFA-PFA) ---- 8-9
FEP Insulated Twisted Thermocouple & Extension Wire(FEP-TW) ---- 10-11
RTD Wire ---- 12-14
Bare Thermocouple Wire ---- 15

Mineral Insulated Cable

Mineral Insulated Thermocouple Cable ---- 16-17
Mineral Insulated RTD Cable ---- 18

Flexible Thermocouple ---- 20-21

Thermocouple Connector

Miniature Connector ---- 22-23
Standard Connector ---- 24-26

Thermocouple Head

KNE Thermocouple Head ---- 27
KSE Thermocouple Head ---- 28
KB Thermocouple Head ---- 29
KBS Thermocouple Head ---- 30
KNC Thermocouple Head ---- 31
KSC Thermocouple Head ---- 32
KD Thermocouple Head ---- 33
KF Thermocouple Head ---- 34
KG Thermocouple Head ---- 35
TL Thermocouple Head ---- 36
TS Thermocouple Head ---- 36
MAA Thermocouple Head ---- 37
NAA Thermocouple Head ---- 38
DANA Thermocouple Head ---- 39
DAAD Thermocouple Head ---- 40

Digital Thermometer ---- 41-42
Expendable Thermocouple ---- 43-44
Accessories ---- 45-46
Thermostar ---- 47

Thermocouple Wire

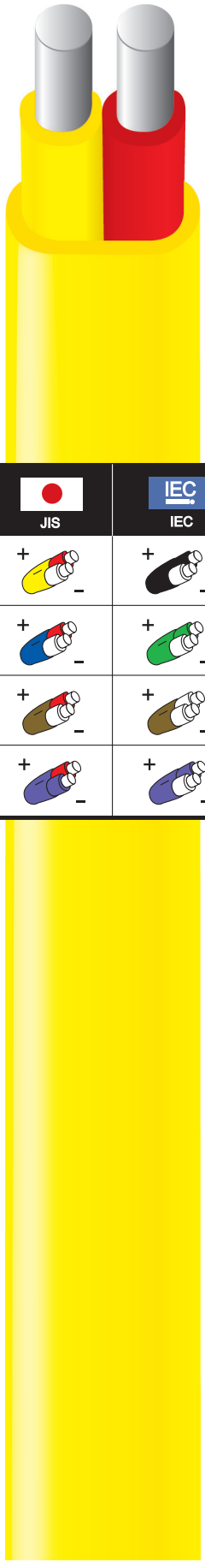

Application

A thermocouple is a temperature measuring device consisting of two conductors of dissimilar metals or alloys that are connected only at the ends. When the ends are at different temperatures, a small voltage is produced in the wire that can be related directly to the temperature difference between the ends. If the temperature at one end is known, the temperature at the other end can be determined.

Thermocouple wire or extension grade wire is recommended to be used to connect thermocouples to the sensing or control instrumentation. The conditions of measurement determine the type of thermocouple wire and insulation to be used. Temperature range, environment, insulation requirements, response, and service life should be considered.

Color Code

Thermocouple Extension Type	ANSI	BS	DIN	NFC	JIS	IEC
JX +Iron -Constantan	+ −	+ −	+ −	+ −	+ −	+ −
KX +Chromel -Alumel	+ −	+ −	+ −	+ −	+ −	+ −
TX +Copper -Constantan	+ −	+ −	+ −	+ −	+ −	+ −
EX +Chromel -Constantan	+ −	+ −	+ −	+ −	+ −	+ −

Calibration Type Characteristics

TYPE J (Iron vs Constantan) is used in vacuum, oxidizing, inert or reducing atmospheres. Iron element oxidizes rapidly at temperatures exceeding 538℃, and therefore heavier gauge wire is recommended for longer life at these temperatures.

TYPE K (Chromel vs Alumel) is used in oxidizing, inert or dry reducing atmospheres. Exposure to vacuum limited to short time periods. Must be protected from sulfurous and marginally oxidizing atmospheres. Reliable and accurate at high temperatures.

TYPE T (Copper vs Constantan) is used or service in oxidizing, inert or reducing atmospheres or in vacuum. It is highly resistant to corrosion from atmospheric moisture and condensation and exhibits high stability at low temperatures. It is the only type with limits of error guaranteed for cryogenic temperatures.

TYPE E (Chromel vs Constantan) may be used in oxidizing, inert or dry reducing atmospheres, or for short periods of time under vacuum. Must be protected from sulfurous and marginally oxidizing atmospheres. Produces the highest EMF per degree of any standardized thermocouple.

ZONZEN

PVC Insulated Thermocouple & Extension Wire (PVC-PVC)

Specification

- Conductor calibration: K, J, E, T
- Conductor insulation: PVC
- Jacket insulation: PVC
- Construction: Parallel conductor
- Max. temp.: 105℃
- Color code: ANSI, IEC & JIS

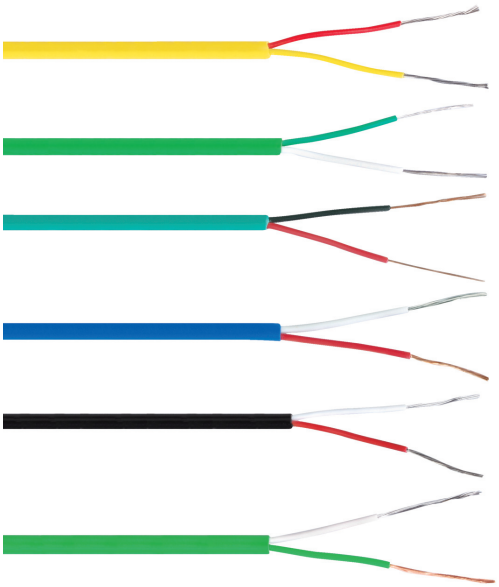

Model Explanation

K ① - PVC ② - SSB ③ - PVC ④ - SSB ⑤ - 20 ⑥ S ⑦

① Calibration: K, J, T, E
② Conductor insulation material: PVC
③ Inner shield material: SSB
④ Jacket insulation material: PVC
⑤ Outer shield material: SSB
⑥ Wire size (AWG)
⑦ "S" means "Stranded"; "Blank" means "Solid"

Order Code

Wire Grade	Wire Size (AWG)	Wire Type	Calibration			
			Type J	Type K	Type T	Type E
Thermocouple	16	Solid	J-PVC-PVC-16	K-PVC-PVC-16	T-PVC-PVC-16	E-PVC-PVC-16
	16 7/24	Stranded	J-PVC-PVC-16S	K-PVC-PVC-16S	T-PVC-PVC-16S	E-PVC-PVC-16S
	20	Solid	J-PVC-PVC-20	K-PVC-PVC-20	T-PVC-PVC-20	E-PVC-PVC-20
	20 7/28	Stranded	J-PVC-PVC-20S	K-PVC-PVC-20S	T-PVC-PVC-20S	E-PVC-PVC-20S
	24	Solid	J-PVC-PVC-24	K-PVC-PVC-24	T-PVC-PVC-24	E-PVC-PVC-24
	24 7/32	Stranded	J-PVC-PVC-24S	K-PVC-PVC-24S	T-PVC-PVC-24S	E-PVC-PVC-24S
Extension	14	Solid	JX-PVC-PVC-14	KX-PVC-PVC-14	TX-PVC-PVC-14	EX-PVC-PVC-14
	16	Solid	JX-PVC-PVC-16	KX-PVC-PVC-16	TX-PVC-PVC-16	EX-PVC-PVC-16
	16 7/24	Stranded	JX-PVC-PVC-16S	KX-PVC-PVC-16S	TX-PVC-PVC-16S	EX-PVC-PVC-16S
	18 7/26	Stranded	JX-PVC-PVC-18S	KX-PVC-PVC-18S	TX-PVC-PVC-18S	EX-PVC-PVC-18S
	20	Solid	JX-PVC-PVC-20	KX-PVC-PVC-20	TX-PVC-PVC-20	EX-PVC-PVC-20
	20 7/28	Stranded	JX-PVC-PVC-20S	KX-PVC-PVC-20S	TX-PVC-PVC-20S	EX-PVC-PVC-20S
	24	Solid	JX-PVC-PVC-24	KX-PVC-PVC-24	TX-PVC-PVC-24	EX-PVC-PVC-24
	24 7/32	Stranded	JX-PVC-PVC-24S	KX-PVC-PVC-24S	TX-PVC-PVC-24S	EX-PVC-PVC-24S

Note: The above order codes represent the more popular constructions. However, other designs are available upon request.

Inner Shield

All above thermocouple and extension wire can be finished with a inner shield (Stainless steel-SSB), If you need the wire with a inner shield, please add "**SSB**" to the order code, such as "**JX-PVC-SSB-PVC-20S**", it means Type JX, 20AWG, Stranded, Conductor insulation: PVC, Inner shield: Stainless steel, Jacket insulation: PVC.

Outer Shield

All above thermocouple and extension wire also can be finished with a metal outer shield to give added protection from abrasion and mechanical damage. If you need the wire with a outer shield, please add "**SSB**" to the order code, such as "**JX-PVC-PVC-SSB-20S**", it means Type JX, 20AWG, Stranded, Conductor insulation: PVC, Jacket insulation: PVC, Outer shield: Stainless steel.



PVC Insulated Thermocouple & Extension Wire (PVC-PVC)

Color Code & Initial Calibration Tolerance for Thermocouple Wire

Thermocouple Type		ANSI Color Code		Initial Calibration Tolerances		
Wire Alloys	Calibration	Conductor (+/-)	Jacket	Temperature Range	Standard Limits	Special Limits
Iron(+) vs. Constantan(-)	J	White/Red	Brown	0℃ to +285℃ 285℃ to +750℃	±2.2℃ ± .75%	±1.1℃ ± .4%
Chromel(+) vs. Alumel(-)	K	Yellow/Red	Brown	-200℃ to -110℃ -110℃ to 0℃ 0℃ to +285℃ 285℃ to +1250℃	± 2% ±2.2℃ ±2.2℃ ± .75%	±1.1℃ ± .4%
Copper(+) vs. Constantan(-)	T	Blue/Red	Brown	-200℃ to -65℃ -65℃ to +130℃ 130℃ to +350℃	± 1.5% ±1℃ ± .75%	± .8% ± .5℃ ± .4%
Chromel(+) vs. Constantan(-)	E	Purple/Red	Brown	-200℃ to -170℃ -170℃ to +250℃ 250℃ to +340℃ 340℃ to +900℃	± 1% ±1.7℃ ±1.7℃ ± .5%	±1℃ ±1℃ ± .4% ± .4%

Color Code & Initial Calibration Tolerance for Extension Wire

Extension Type		ANSI Color Code		Initial Calibration Tolerances		
Wire Alloys	Calibration	Conductor (+/-)	Jacket	Temperature Range	Standard Limits	Special Limits
Iron(+) vs. Constantan(-)	JX	White/Red	Black	0℃ to +200℃	±2.2℃	±1.1℃
Chromel(+) vs. Alumel(-)	KX	Yellow/Red	Yellow	0℃ to +200℃	±2.2℃	±1.1℃
Copper(+) vs. Constantan(-)	TX	Blue/Red	Blue	-60℃ to +100℃	±1.1℃	± .5℃
Chromel(+) vs. Constantan(-)	EX	Purple/Red	Purple	0℃ to +200℃	±1.7℃	±1.1℃

Nominal Insulation Thickness

Wire Size (AWG)	Conductor Insulation Thickness (mm)	Jacket Insulation Thickness (mm)	Outer Diameter (mm)
14	0.38	0.45	3.2×5.6
16	0.38	0.38	2.8×4.9
16 7/24	0.38	0.38	3.0×5.0
20	0.38	0.38	2.3×3.9
20 7/28	0.38	0.38	2.4×4.1
24	0.38	0.38	2.0×3.3
24 7/32	0.38	0.38	2.1×3.5

PVC-PVC Physical Properties

Characteristics	Insulation	Jacket
Abrasion Resistance	Good	Good
Cut Through Resistance	Good	Good
Moisture Resistance	Excellent	Excellent
Solder Iron Resistance	Poor	Poor
Service Temperature	105℃ continuous 150℃ single	105℃ continuous 150℃ single
Flame Test	Self-extinguishing	Self-extinguishing

ZONZEN

Fiberglass Braided Insulated Thermocouple & Extension Wire(FB-FB)

Specification

- Conductor calibration: K, J, E, T
- Conductor insulation: Fiberglass
- Jacket insulation: Fiberglass
- Construction: Parallel conductor
- Max. temp. : 480℃
- Color code: ANSI, IEC & JIS

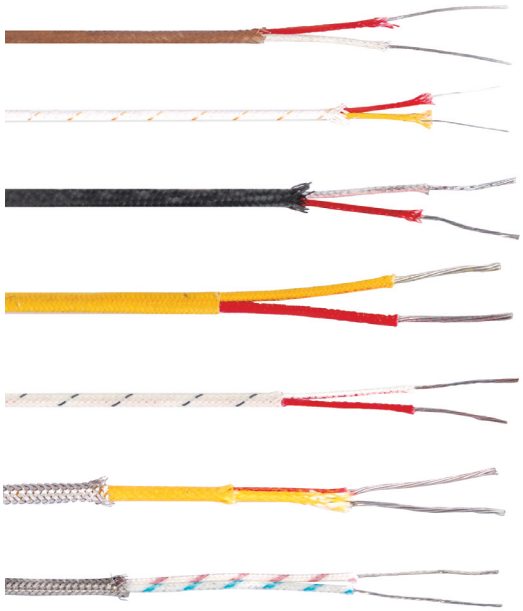

Model Explanation

K - FB - SSB - FB - SSB - 20 S
① ② ③ ④ ⑤ ⑥ ⑦

① Calibration: K, J, T, E
② Conductor insulation material: Fiberglass
③ Inner shield material: SSB
④ Jacket insulation material: Fiberglass
⑤ Outer shield material: SSB
⑥ Wire size (AWG)
⑦ "S" means "Stranded"; "Blank" means "Solid"

Order Code

Wire Grade	Wire Size (AWG)	Wire Type	Calibration			
			Type J	Type K	Type T	Type E
Thermocouple	14	Solid	J-FB-FB-14	K-FB-FB-14	T-FB-FB-14	E-FB-FB-14
	16	Solid	J-FB-FB-16	K-FB-FB-16	T-FB-FB-16	E-FB-FB-16
	20	Solid	J-FB-FB-20	K-FB-FB-20	T-FB-FB-20	E-FB-FB-20
	20 7 /28	Stranded	J-FB-FB-20S	K-FB-FB-20S	T-FB-FB-20S	E-FB-FB-20S
	24	Solid	J-FB-FB-24	K-FB-FB-24	T-FB-FB-24	E-FB-FB-24
	24 7 /32	Stranded	J-FB-FB-24S	K-FB-FB-24S	T-FB-FB-24S	E-FB-FB-24S
Extension	16	Solid	JX-FB-FB-16	KX-FB-FB-16	TX-FB-FB-16	EX-FB-FB-16
	20	Solid	JX-FB-FB-20	KX-FB-FB-20	TX-FB-FB-20	EX-FB-FB-20
	20 7/28	Stranded	JX-FB-FB-20S	KX-FB-FB-20S	TX-FB-FB-20S	EX-FB-FB-20S
	24	Solid	JX-FB-FB-24	KX-FB-FB-24	TX-FB-FB-24	EX-FB-FB-24
	24 7/32	Stranded	JX-FB-FB-24S	KX-FB-FB-24S	TX-FB-FB-24S	EX-FB-FB-24S

Note: The above order codes represent the more popular constructions. However, other designs are available upon request.

Outer Shield

All above thermocouple and extension wire also can be finished with a metal outer shield to give added protection from abrasion and mechanical damage. If you need the wire with a outer shield, please add "**SSB**" to the order code, such as "**JX-FB-FB-SSB-20S**", it means Type JX, 20AWG, Stranded, Conductor insulation: Fiberglass, Jacket insulation: Fiberglass, Outer shield: Stainless steel.

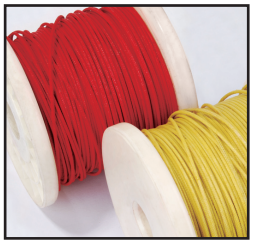

Fiberglass Braided Insulated Thermocouple & Extension Wire(FB-FB)

Color Code & Initial Calibration Tolerance for Thermocouple Wire

Thermocouple Type		ANSI Color Code		Initial Calibration Tolerances		
Wire Alloys	Calibration	Conductor (+/-)	Jacket	Temperature Range	Standard Limits	Special Limits
Iron(+) vs. Constantan(-)	J	White/Red	Brown	0℃ to +285℃ 285℃ to +750℃	±2.2℃ ± .75%	±1.1℃ ± .4%
Chromel(+) vs. Alumel(-)	K	Yellow/Red	Brown	-200℃ to -110℃ -110℃ to 0℃ 0℃ to +285℃ 285℃ to +1250℃	± 2% ±2.2℃ ±2.2℃ ± .75%	 ±1.1℃ ± .4%
Copper(+) vs. Constantan(-)	T	Blue/Red	Brown	-200℃ to -65℃ -65℃ to +130℃ 130℃ to +350℃	± 1.5% ±1℃ ± .75%	± .8% ± .5℃ ± .4%
Chromel(+) vs. Constantan(-)	E	Purple/Red	Brown	-200℃ to -170℃ -170℃ to +250℃ 250℃ to +340℃ 340℃ to +900℃	± 1% ±1.7℃ ±1.7℃ ± .5%	±1℃ ±1℃ ± .4% ± .4%

Color Code & Initial Calibration Tolerance for Extension Wire

Extension Type		ANSI Color Code		Initial Calibration Tolerances		
Wire Alloys	Calibration	Conductor (+/-)	Jacket	Temperature Range	Standard Limits	Special Limits
Iron(+) vs. Constantan(-)	JX	White/Red	Black	0℃ to +200℃	±2.2℃	±1.1℃
Chromel(+) vs. Alumel(-)	KX	Yellow/Red	Yellow	0℃ to +200℃	±2.2℃	±1.1℃
Copper(+) vs. Constantan(-)	TX	Blue/Red	Blue	-60℃ to +100℃	±1.1℃	± .5℃
Chromel(+) vs. Constantan(-)	EX	Purple/Red	Purple	0℃ to +200℃	±1.7℃	±1.1℃

Nominal Insulation Thickness

Wire Size (AWG)	Conductor Insulation Thickness (mm)	Jacket Insulation Thickness (mm)	Outer Diameter (mm)
14	0.18	0.25	2.5×4.6
16	0.18	0.25	2.2×3.8
16 7/24	0.18	0.25	2.4×4.3
20	0.15	0.15	1.4×2.5
20 7/28	0.15	0.15	1.5×2.7
24	0.15	0.15	1.0×1.7
24 7/32	0.15	0.15	1.2×2.1

FB-FB Physical Properties

Characteristics	Insulation	Jacket
Abrasion Resistance	Good	Good
Cut Through Resistance	Very good	Excellent
Moisture Resistance	Good	Good
Solder Iron Resistance	Excellent	Excellent
Service Temperature	480℃ continuous 537℃ single	480℃ continuous 537℃ single
Flame Test	Non-flammable	Non-flammable

ZONZEN

FEP Insulated Thermocouple & Extension Wire (FEP-FEP)

Specification

- Conductor calibration: K, J, E, T
- Conductor insulation: FEP
- Jacket insulation: FEP
- Construction: Parallel conductor
- Max. temp. : 200℃
- Color code: ANSI, IEC & JIS

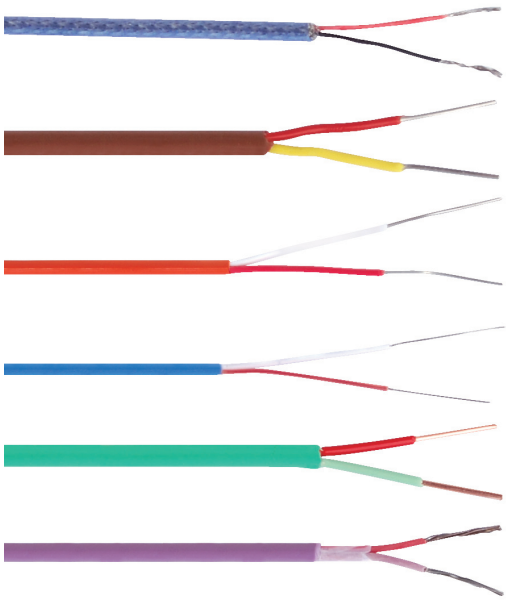

Model Explanation

K ① - FEP ② - SSB ③ - FEP ④ - SSB ⑤ - 20 ⑥ S ⑦

① Calibration: K, J, T, E
② Conductor insulation material: FEP
③ Inner shield material: SSB
④ Jacket insulation material: FEP
⑤ Outer shield material: SSB
⑥ Wire size (AWG)
⑦ "S" means "Stranded"; "Blank" means "Solid"

Order Code

Wire Grade	Wire Size (AWG)	Wire Type	Calibration			
			Type J	Type K	Type T	Type E
Thermocouple	20	Solid	J-FEP-FEP-20	K-FEP-FEP-20	T-FEP-FEP-20	E-FEP-FEP-20
	20 7/28	Stranded	J-FEP-FEP-20S	K-FEP-FEP-20S	T-FEP-FEP-20S	E-FEP-FEP-20S
	24	Solid	J-FEP-FEP-24	K-FEP-FEP-24	T-FEP-FEP-24	E-FEP-FEP-24
	24 7/32	Stranded	J-FEP-FEP-24S	K-FEP-FEP-24S	T-FEP-FEP-24S	E-FEP-FEP-24S
	30	Solid	J-FEP-FEP-30	K-FEP-FEP-30	T-FEP-FEP-30	E-FEP-FEP-30
Extension	16	Solid	JX-FEP-FEP-16	KX-FEP-FEP-16	TX-FEP-FEP-16	EX-FEP-FEP-16
	20	Solid	JX-FEP-FEP-20	KX-FEP-FEP-20	TX-FEP-FEP-20	EX-FEP-FEP-20
	20 7/28	Stranded	JX-FEP-FEP-20S	KX-FEP-FEP-20S	TX-FEP-FEP-20S	EX-FEP-FEP-20S
	24	Solid	JX-FEP-FEP-24	KX-FEP-FEP-24	TX-FEP-FEP-24	EX-FEP-FEP-24
	24 7/32	Stranded	JX-FEP-FEP-24S	KX-FEP-FEP-24S	TX-FEP-FEP-24S	EX-FEP-FEP-24S

Note: The above order codes represent the more popular constructions. However, other designs are available upon request.

Inner Shield

All above thermocouple and extension wire can be finished with a inner shield (Stainless steel-SSB), If you need the wire with a inner shield, please add "**SSB**" to the order code, such as "**JX-FEP-SSB-FEP-20S**", it means Type JX, 20AWG, Stranded, Conductor insulation: FEP, Inner shield: Stainless steel, Jacket insulation: FEP.

Outer Shield

All above thermocouple and extension wire also can be finished with a metal outer shield to give added protection from abrasion and mechanical damage. If you need the wire with a outer shield, please add "**SSB**" to the order code, such as "**JX-FEP-FEP-SSB-20S**", it means Type JX, 20AWG, Stranded, Conductor insulation: FEP, Jacket insulation: FEP, Outer shield: Stainless steel.

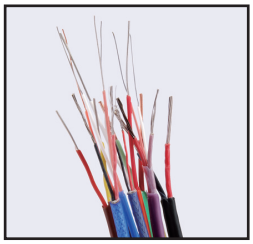

FEP Insulated Thermocouple & Extension Wire (FEP-FEP)

Color Code & Initial Calibration Tolerance for Thermocouple Wire

Thermocouple Type		ANSI Color Code		Initial Calibration Tolerances		
Wire Alloys	Calibration	Conductor (+/-)	Jacket	Temperature Range	Standard Limits	Special Limits
Iron(+) vs. Constantan(-)	J	White/Red	Brown	0℃ to +285℃ 285℃ to +750℃	±2.2℃ ± .75%	±1.1℃ ± .4%
Chromel(+) vs. Alumel(-)	K	Yellow/Red	Brown	-200℃ to -110℃ -110℃ to 0℃ 0℃ to +285℃ 285℃ to +1250℃	± 2% ±2.2℃ ±2.2℃ ± .75%	 ±1.1℃ ± .4%
Copper(+) vs. Constantan(-)	T	Blue/Red	Brown	-200℃ to -65℃ -65℃ to +130℃ 130℃ to +350℃	± 1.5% ±1℃ ± .75%	± .8% ± .5℃ ± .4%
Chromel(+) vs. Constantan(-)	E	Purple/Red	Brown	-200℃ to -170℃ -170℃ to +250℃ 250℃ to +340℃ 340℃ to +900℃	± 1% ±1.7℃ ±1.7℃ ± .5%	±1℃ ±1℃ ± .4% ± .4%

Color Code & Initial Calibration Tolerance for Extension Wire

Extension Type		ANSI Color Code		Initial Calibration Tolerances		
Wire Alloys	Calibration	Conductor (+/-)	Jacket	Temperature Range	Standard Limits	Special Limits
Iron(+) vs. Constantan(-)	JX	White/Red	Black	0℃ to +200℃	±2.2℃	±1.1℃
Chromel(+) vs. Alumel(-)	KX	Yellow/Red	Yellow	0℃ to +200℃	±2.2℃	±1.1℃
Copper(+) vs. Constantan(-)	TX	Blue/Red	Blue	-60℃ to +100℃	±1.1℃	± .5℃
Chromel(+) vs. Constantan(-)	EX	Purple/Red	Purple	0℃ to +200℃	±1.7℃	±1.1℃

Nominal Insulation Thickness

Wire Size (AWG)	Conductor Insulation Thickness (mm)	Jacket Insulation Thickness (mm)	Outer Diameter (mm)
14	0.20	0.25	2.6×4.8
16	0.20	0.25	2.2×3.9
16 7/24	0.20	0.25	2.4×4.3
20	0.20	0.25	1.7×2.9
20 7/28	0.20	0.25	1.8×3.1
24	0.20	0.25	1.4×2.3
24 7/32	0.20	0.25	1.6×2.7

FEP-FEP Physical Properties

Characteristics	Insulation	Jacket
Abrasion Resistance	Very good	Very good
Cut Through Resistance	Good	Good
Moisture Resistance	Excellent	Excellent
Solder Iron Resistance	Good	Good
Service Temperature	200℃ continuous 250℃ single	200℃ continuous 250℃ single
Flame Test	Self-extinguishing	Self-extinguishing

ZONZEN

PFA Insulated Thermocouple & Extension Wire (PFA-PFA)

Specification

- Conductor calibration: K, J, E, T
- Conductor insulation: PFA
- Jacket insulation: PFA
- Construction: Parallel conductor
- Max. temp. : 260℃
- Color code: ANSI, IEC & JIS

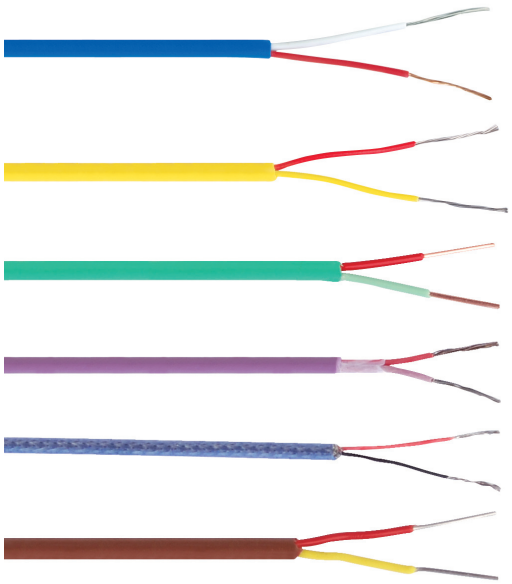

Model Explanation

K - PFA - SSB - PFA - SSB - 20 S
① ② ③ ④ ⑤ ⑥ ⑦

① Calibration: K, J, T, E
② Conductor insulation material: PFA
③ Inner shield material: SSB
④ Jacket insulation material: PFA
⑤ Outer shield material: SSB
⑥ Wire size (AWG)
⑦ "S" means "Stranded"; "Blank" means "Solid"

Order Code

Wire Grade	Wire Size (AWG)	Wire Type	Calibration			
			Type J	Type K	Type T	Type E
Thermocouple	16	Solid	J-PFA-PFA-16	K-PFA-PFA-16	T-PFA-PFA-16	E-PFA-PFA-16
	20	Solid	J-PFA-PFA-20	K-PFA-PFA-20	T-PFA-PFA-20	E-PFA-PFA-20
	20 7/28	Stranded	J-PFA-PFA-20S	K-PFA-PFA-20S	T-PFA-PFA-20S	E-PFA-PFA-20S
	22 7/30	Stranded	J-PFA-PFA-22S	K-PFA-PFA-22S	T-PFA-PFA-22S	E-PFA-PFA-22S
	24	Solid	J-PFA-PFA-24	K-PFA-PFA-24	T-PFA-PFA-24	E-PFA-PFA-24
	24 7/32	Stranded	J-PFA-PFA-24S	K-PFA-PFA-24S	T-PFA-PFA-24S	E-PFA-PFA-24S
	30	Solid	J-PFA-PFA-30	K-PFA-PFA-30	T-PFA-PFA-30	E-PFA-PFA-30
Extension	16	Solid	JX-PFA-PFA-16	KX-PFA-PFA-16	TX-PFA-PFA-16	EX-PFA-PFA-16
	20	Solid	JX-PFA-PFA-20	KX-PFA-PFA-20	TX-PFA-PFA-20	EX-PFA-PFA-20
	20 7/28	Stranded	JX-PFA-PFA-20S	KX-PFA-PFA-20S	TX-PFA-PFA-20S	EX-PFA-PFA-20S
	24	Solid	JX-PFA-PFA-24	KX-PFA-PFA-24	TX-PFA-PFA-24	EX-PFA-PFA-24
	24 7/32	Stranded	JX-PFA-PFA-24S	KX-PFA-PFA-24S	TX-PFA-PFA-24S	EX-PFA-PFA-24S

Note: The above order codes represent the more popular constructions. However, other designs are available upon request.

Inner Shield

All above thermocouple and extension wire can be finished with a inner shield (Stainless steel-SSB), If you need the wire with a inner shield, please add "**SSB**" to the order code, such as "**JX-PFA-SSB-PFA-20S**", it means Type JX, 20AWG, Stranded, Conductor insulation: PFA, Inner shield: Stainless steel, Jacket insulation: PFA.

Outer Shield

All above thermocouple and extension wire also can be finished with a metal outer shield to give added protection from abrasion and mechanical damage. If you need the wire with a outer shield, please add "**SSB**" to the order code, such as "**JX-PFA-PFA-SSB-20S**", it means Type JX, 20AWG, Stranded, Conductor insulation: PFA, Jacket insulation: PFA, Outer shield: Stainless steel.



PFA Insulated Thermocouple & Extension Wire (PFA-PFA)

Color Code & Initial Calibration Tolerance for Thermocouple Wire

Thermocouple Type		ANSI Color Code		Initial Calibration Tolerances		
Wire Alloys	Calibration	Conductor (+/-)	Jacket	Temperature Range	Standard Limits	Special Limits
Iron(+) vs. Constantan(-)	J	White/Red	Brown	0℃ to +285℃ 285℃ to +750℃	±2.2℃ ± .75%	±1.1℃ ± .4%
Chromel(+) vs. Alumel(-)	K	Yellow/Red	Brown	-200℃ to -110℃ -110℃ to 0℃ 0℃ to +285℃ 285℃ to +1250℃	± 2% ±2.2℃ ±2.2℃ ± .75%	 ±1.1℃ ± .4%
Copper(+) vs. Constantan(-)	T	Blue/Red	Brown	-200℃ to -65℃ -65℃ to +130℃ 130℃ to +350℃	± 1.5% ±1℃ ± .75%	± .8% ± .5℃ ± .4%
Chromel(+) vs. Constantan(-)	E	Purple/Red	Brown	-200℃ to -170℃ -170℃ to +250℃ 250℃ to +340℃ 340℃ to +900℃	± 1% ±1.7℃ ±1.7℃ ± .5%	±1℃ ±1℃ ± .4% ± .4%

Color Code & Initial Calibration Tolerance for Extension Wire

Extension Type		ANSI Color Code		Initial Calibration Tolerances		
Wire Alloys	Calibration	Conductor (+/-)	Jacket	Temperature Range	Standard Limits	Special Limits
Iron(+) vs. Constantan(-)	JX	White/Red	Black	0℃ to +200℃	±2.2℃	±1.1℃
Chromel(+) vs. Alumel(-)	KX	Yellow/Red	Yellow	0℃ to +200℃	±2.2℃	±1.1℃
Copper(+) vs. Constantan(-)	TX	Blue/Red	Blue	-60℃ to +100℃	±1.1℃	± .5℃
Chromel(+) vs. Constantan(-)	EX	Purple/Red	Purple	0℃ to +200℃	±1.7℃	±1.1℃

Nominal Insulation Thickness

Wire Size (AWG)	Conductor Insulation Thickness (mm)	Jacket Insulation Thickness (mm)	Outer Diameter (mm)
14	0.20	0.25	2.6×4.8
16	0.20	0.25	2.2×3.9
16 7/24	0.20	0.25	2.4×4.3
20	0.20	0.25	1.7×2.9
20 7/28	0.20	0.25	1.8×3.1
24	0.20	0.25	1.4×2.3
24 7/32	0.20	0.25	1.6×2.7

PFA-PFA Physical Properties

Characteristics	Insulation	Jacket
Abrasion Resistance	Very good	Very good
Cut Through Resistance	Good	Good
Moisture Resistance	Excellent	Excellent
Solder Iron Resistance	Good	Good
Service Temperature	260℃ continuous 288℃ single	260℃ continuous 288℃ single
Flame Test	Non-flammable	Non-flammable

ZONZEN

FEP Insulated Twisted Thermocouple & Extension Wire(FEP-TW)

Specification

- Conductor calibration: K, J, E, T
- Conductor insulation: FEP
- Construction: Twisted conductor
- Max. temp. : 200℃
- Color code: ANSI, IEC & JIS

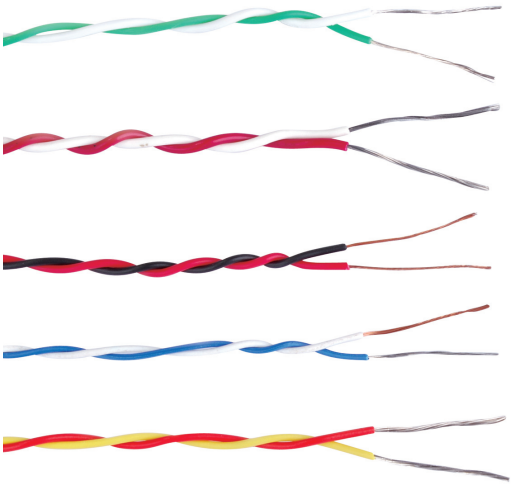

Model Explanation

K - FEP - TW - 20 S
① ② ③ ④ ⑤

① Calibration: K, J, T, E
② Conductor insulation material: FEP
③ Means "Twisted"
④ Wire size (AWG)
⑤"S" means "Stranded"; "Blank" means "Solid"

Order Code

Wire Grade	Wire Size (AWG)	Wire Type	Calibration			
			Type J	Type K	Type T	Type E
Thermocouple	20	Solid	J-FEP-TW-20	K-FEP-TW-20	T-FEP-TW-20	E-FEP-TW-20
	20 7/28	Stranded	J-FEP-TW-20S	K-FEP-TW-20S	T-FEP-TW-20S	E-FEP-TW-20S
	24	Solid	J-FEP-TW-24	K-FEP-TW-24	T-FEP-TW-24	E-FEP-TW-24
	24 7/32	Stranded	J-FEP-TW-24S	K-FEP-TW-24S	T-FEP-TW-24S	E-FEP-TW-24S
	30	Solid	J-FEP-TW-30	K-FEP-TW-30	T-FEP-TW-30	E-FEP-TW-30
Extension	20	Solid	JX-FEP-TW-20	KX-FEP-TW-20	TX-FEP-TW-20	EX-FEP-TW-20
	20 7/28	Stranded	JX-FEP-TW-20S	KX-FEP-TW-20S	TX-FEP-TW-20S	EX-FEP-TW-20S
	24	Solid	JX-FEP-TW-24	KX-FEP-TW-24	TX-FEP-TW-24	EX-FEP-TW-24
	24 7/32	Stranded	JX-FEP-TW-24S	KX-FEP-TW-24S	TX-FEP-TW-24S	EX-FEP-TW-24S
	30	Solid	JX-FEP-TW-30	KX-FEP-TW-30	TX-FEP-TW-30	EX-FEP-TW-30

Note: The above order codes represent the more popular constructions. However, other designs are available upon request.

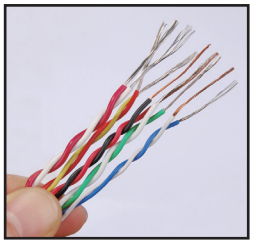

FEP Insulated Twisted Thermocouple & Extension Wire(FEP-TW)

Color Code & Initial Calibration Tolerance for Thermocouple Wire

Thermocouple Type		Initial Calibration Tolerances			
Wire Alloys	Calibration	Conductor (+/-)	Temperature Range	Standard Limits	Special Limits
Iron(+) vs. Constantan(-)	J	White/Red	0℃ to +285℃ 285℃ to +750℃	±2.2℃ ± .75%	±1.1℃ ± .4%
Chromel(+) vs. Alumel(-)	K	Yellow/Red	-200℃ to -110℃ -110℃ to 0℃ 0℃ to +285℃ 285℃ to +1250℃	± 2% ±2.2℃ ±2.2℃ ± .75%	 ±1.1℃ ± .4%
Copper(+) vs. Constantan(-)	T	Blue/Red	-200℃ to -65℃ -65℃ to +130℃ 130℃ to +350℃	± 1.5% ±1℃ ± .75%	± .8% ± .5℃ ± .4%
Chromel(+) vs. Constantan(-)	E	Purple/Red	-200℃ to -170℃ -170℃ to +250℃ 250℃ to +340℃ 340℃ to +900℃	± 1% ±1.7℃ ±1.7℃ ± .5%	±1℃ ±1℃ ± .4% ± .4%

Color Code & Initial Calibration Tolerance for Extension Wire

Extension Type		Initial Calibration Tolerances			
Wire Alloys	Calibration	Conductor (+/-)	Temperature Range	Standard Limits	Special Limits
Iron(+) vs. Constantan(-)	JX	White/Red	0℃ to +200℃	±2.2℃	±1.1℃
Chromel(+) vs. Alumel(-)	KX	Yellow/Red	0℃ to +200℃	±2.2℃	±1.1℃
Copper(+) vs. Constantan(-)	TX	Blue/Red	-60℃ to +200℃	±1.1℃	± .5℃
Chromel(+) vs. Constantan(-)	EX	Purple/Red	0℃ to +200℃	±1.7℃	±1.1℃

Nominal Insulation Thickness

Wire Size (AWG)	Conductor Insulation Thickness (mm)	Outer Diameter (mm)
16	0.20	3.4
16 7/24	0.20	3.8
20	0.20	2.4
20 7/28	0.20	2.6
24	0.20	1.8
24 7/32	0.20	2.0

FEP-TW Physical Properties

Characteristics	Insulation
Abrasion Resistance	Very good
Cut Through Resistance	Good
Moisture Resistance	Excellent
Solder Iron Resistance	Good
Service Temperature	200℃ continuous 250℃ single
Flame Test	Self-extinguishing

ZONZEN

FEP Insulated Resistance Temperature Detector (RTD) Wire

Feature

- Used for extending RTD and thermistor signal leads
- Available with Fiberglass, Teflon and PVC insulation
- Wire available with 2, 3, 4, 6 and 8 conductors
- Spool lengths in meters

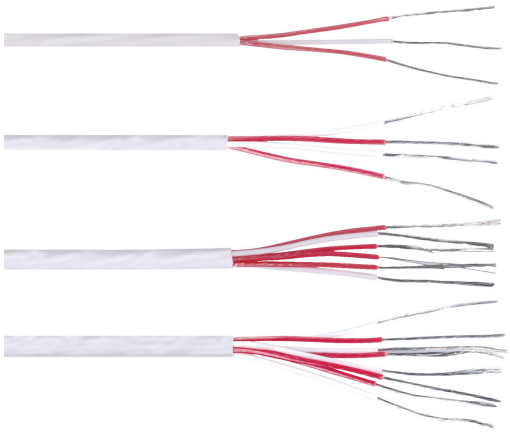

Specification

- Conductor: Silver-plated copper wire
- Inuslation material: FEP
- Max. temp. : 200℃
- Color code: 3CU: Red/Red/White
  4CU: Red/Red/White/White
  6CU: Red/Red/Red/Red/White/White

Order Code	Number of Conductors	Wire Size (AWG)	Wire Type	Insulation		Inner Shield	Outer Shield
				Conductor	Jacket		
FEP-FEP-3CU-24	3	24	Solid	FEP	FEP	-	-
FEP-FEP-3CU-24S	3	24 7/32	Stranded	FEP	FEP	-	-
FEP-SSB-FEP-3CU-24	3	24	Solid	FEP	FEP	Stainless steel	-
FEP-SSB-FEP-3CU-24S	3	24 7/32	Stranded	FEP	FEP	Stainless steel	-
FEP-FEP-SSB-3CU-24	3	24	Solid	FEP	FEP	-	Stainless steel or Tinned copper
FEP-FEP-SSB-3CU-24S	3	24 7/32	Stranded	FEP	FEP	-	Stainless steel or Tinned copper
FEP-FEP-4CU-24	4	24	Solid	FEP	FEP	-	-
FEP-FEP-4CU-24S	4	24 7/32	Stranded	FEP	FEP	-	-
FEP-SSB-FEP-4CU-24	4	24	Solid	FEP	FEP	Stainless steel	-
FEP-SSB-FEP-4CU-24S	4	24 7/32	Stranded	FEP	FEP	Stainless steel	-
FEP-FEP-SSB-4CU-24	4	24	Solid	FEP	FEP	-	Stainless steel or Tinned copper
FEP-FEP-SSB-4CU-24S	4	24 7/32	Stranded	FEP	FEP	-	Stainless steel or Tinned copper
FEP-FEP-6CU-24	6	24	Solid	FEP	FEP	-	-
FEP-FEP-6CU-24S	6	24 7/32	Stranded	FEP	FEP	-	-
FEP-SSB-FEP-6CU-24	6	24	Solid	FEP	FEP	Stainless steel	-
FEP-SSB-FEP-6CU-24S	6	24 7/32	Stranded	FEP	FEP	Stainless steel	-
FEP-FEP-SSB-6CU-24	6	24	Solid	FEP	FEP	-	Stainless steel or Tinned copper
FEP-FEP-SSB-6CU-24S	6	24 7/32	Stranded	FEP	FEP	-	Stainless steel or Tinned copper

Note: The above order codes represent the more popular constructions. However, other designs are available upon request.

Fiberglass Insulated Resistance Temperature Detector (RTD) Wire

Feature

- Used for extending RTD and thermistor signal leads
- Available with Fiberglass, Teflon and PVC insulation
- Wire available with 2, 3, 4, 6 and 8 conductors
- Spool lengths in meters

Specification

- Conductor: Silver-plated copper wire
- Inuslation material: Fiberglass
- Max. temp. : 480℃
- Color code: 2CU: Red/White
  3CU: Red/Red/White
  4CU: Red/Red/White/White

Order Code	Number of Conductors	Wire Size (AWG)	Wire Type	Insulation		Inner Shield	Outer Shield
				Conductor	Jacket		
FB-FB-2CU-24	2	24	Solid	Fiberglass braid	Fiberglass braid	-	-
FB-FB-2CU-24S	2	24 7/32	Stranded	Fiberglass braid	Fiberglass braid	-	-
FB-SSB-FB-2CU-24	2	24	Solid	Fiberglass braid	Fiberglass braid	Stainless steel	-
FB-SSB-FB-2CU-24S	2	24 7/32	Stranded	Fiberglass braid	Fiberglass braid	Stainless steel	-
FB-FB-SSB-2CU-24	2	24	Solid	Fiberglass braid	Fiberglass braid	-	Stainless steel or Tinned copper
FB-FB-SSB-2CU-24S	2	24 7/32	Stranded	Fiberglass braid	Fiberglass braid	-	Stainless steel or Tinned copper
FB-FB-3CU-24	3	24	Solid	Fiberglass braid	Fiberglass braid	-	-
FB-FB-3CU-24S	3	24 7/32	Stranded	Fiberglass braid	Fiberglass braid	-	-
FB-SSB-FB-3CU-24	3	24	Solid	Fiberglass braid	Fiberglass braid	Stainless steel	-
FB-SSB-FB-3CU-24S	3	24 7/32	Stranded	Fiberglass braid	Fiberglass braid	Stainless steel	-
FB-FB-SSB-3CU-24	3	24	Solid	Fiberglass braid	Fiberglass braid	-	Stainless steel or Tinned copper
FB-FB-SSB-3CU-24S	3	24 7/32	Stranded	Fiberglass braid	Fiberglass braid	-	Stainless steel or Tinned copper
FB-FB-4CU-24	4	24	Solid	Fiberglass braid	Fiberglass braid	-	-
FB-FB-4CU-24S	4	24 7/32	Stranded	Fiberglass braid	Fiberglass braid	-	-
FB-SSB-FB-4CU-24	4	24	Solid	Fiberglass braid	Fiberglass braid	Stainless steel	-
FB-SSB-FB-4CU-24S	4	24 7/32	Stranded	Fiberglass braid	Fiberglass braid	Stainless steel	-
FB-FB-SSB-4CU-24	4	24	Solid	Fiberglass braid	Fiberglass braid	-	Stainless steel or Tinned copper
FB-FB-SSB-4CU-24S	4	24 7/32	Stranded	Fiberglass braid	Fiberglass braid	-	Stainless steel or Tinned copper

Note: The above order codes represent the more popular constructions. However, other designs are available upon request.

ZONZEN

PFA Insulated Resistance Temperature Detector (RTD) Wire

Feature

- Used for extending RTD and thermistor signal leads
- Available with Fiberglass, Teflon and PVC insulation
- Wire available with 2, 3, 4, 6 and 8 conductors
- Spool lengths in meters

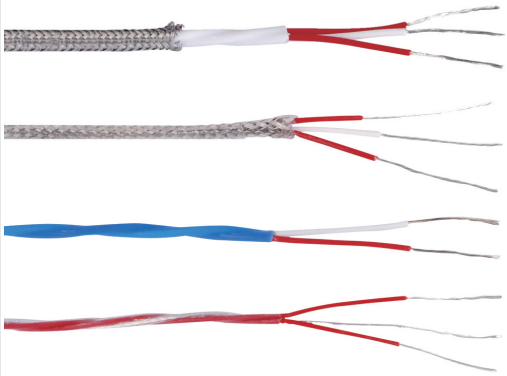

Specification

- Conductor: Silver-plated copper wire
- Inuslation material: PFA
- Max. temp. : 260℃
- Color code: 2CU: Red/White
  3CU: Red/Red/White
  4CU: Red/Red/White/White

Order Code	Number of Conductors	Wire Size (AWG)	Wire Type	Insulation		Inner Shield	Outer Shield
				Conductor	Jacket		
PFA-PFA-2CU-24	2	24	Solid	PFA	PFA	-	-
PFA-PFA-2CU-24S	2	24 7/32	Stranded	PFA	PFA	-	-
PFA-SSB-PFA-2CU-24	2	24	Solid	PFA	PFA	Stainless steel	-
PFA-SSB-PFA-2CU-24S	2	24 7/32	Stranded	PFA	PFA	Stainless steel	-
PFA-PFA-SSB-2CU-24	2	24	Solid	PFA	PFA	-	Stainless steel or Tinned copper
PFA-PFA-SSB-2CU-24S	2	24 7/32	Stranded	PFA	PFA	-	Stainless steel or Tinned copper
PFA-PFA-3CU-24	3	24	Solid	PFA	PFA	-	-
PFA-PFA-3CU-24S	3	24 7/32	Stranded	PFA	PFA	-	-
PFA-SSB-PFA-3CU-24	3	24	Solid	PFA	PFA	Stainless steel	-
PFA-SSB-PFA-3CU-24S	3	24 7/32	Stranded	PFA	PFA	Stainless steel	-
PFA-PFA-SSB-3CU-24	3	24	Solid	PFA	PFA	-	Stainless steel or Tinned copper
PFA-PFA-SSB-3CU-24S	3	24 7/32	Stranded	PFA	PFA	-	Stainless steel or Tinned copper
PFA-PFA-4CU-24	4	24	Solid	PFA	PFA	-	-
PFA-PFA-4CU-24S	4	24 7/32	Stranded	PFA	PFA	-	-
PFA-SSB-PFA-4CU-24	4	24	Solid	PFA	PFA	Stainless steel	-
PFA-SSB-PFA-4CU-24S	4	24 7/32	Stranded	PFA	PFA	Stainless steel	-
PFA-PFA-SSB-4CU-24	4	24	Solid	PFA	PFA	-	Stainless steel or Tinned copper
PFA-PFA-SSB-4CU-24S	4	24 7/32	Stranded	PFA	PFA	-	Stainless steel or Tinned copper

Note: The above order codes represent the more popular constructions. However, other designs are available upon request.

Bare Thermocouple Wire

Features

- Thermocouple is the most adapted method for meas-uring temperatures, sometimes the only available method.
- Thermocouples can be created with various combinations of alloys.
- Our thermocouple alloys wire can be used to measure temperatures from -200 ℃ to higher temperatures up to 1260℃.



Chemical Composition

Type	Polarity	Chemical Composition	Type	Polarity	Chemical Composition	Type	Polarity	Chemical Composition
J	JP JN	Fe Cu Ni 44	JX	JPX JNX	Fe Cu Ni 44			
K	KP	Ni Cr 10		KPX	Ni Cr 10	KCB	KCPB KCNB	Cu Cu Ni 44
	KN	Ni Si ++ Cu ++	KX	KNX	Ni ++ Si ++ Cu ++	KCA	KCPA KCNA	Fe Cu Ni 43
T	TP TN	Cu Cu Ni 44	TX	TPX TNX	Cu Cu Ni 44			
E	EP EN	Ni Cr 10 Cu Ni 44	EX	EPX ENX	Ni Cr 10 Cu Ni 44			

Order Code

Calibration	Polarity	Chemical Composition	Wire Size (AWG)	Stranding	
				N × OD (mm)	N × OD (Inches)
J (Iron-Constantan)	JP	Fe	8 10 12 12 (7/20) 14 14 (7/22) 16 16 (7/24) 18 18 (7/26) 20 20 (7/28) 22 22 (7/30) 24 24 (7/32) 26 28 30 32	1 × 3.251 1 × 2.591 1 × 2.057 7 × 0.813 1 × 1.626 7 × 0.635 1 × 1.295 7 × 0.508 1 × 1.016 7 × 0.406 1 × 0.813 7 × 0.330 1 × 0.635 7 × 0.254 1 × 0.508 7 × 0.203 1 × 0.406 1 × 0.330 1 × 0.254 1 × 0.203	1 × 0.128 1 × 0.102 1 × 0.081 7 × 0.032 1 × 0.064 7 × 0.025 1 × 0.051 7 × 0.020 1 × 0.040 7 × 0.016 1 × 0.032 7 × 0.013 1 × 0.025 7 × 0.010 1 × 0.020 7 × 0.008 1 × 0.016 1 × 0.013 1 × 0.010 1 × 0.008
	JN	Cu Ni44			
K (Chromel-Alumel)	KP	Ni Cr10			
	KN	Ni Si			
T (Copper-Constantan)	TP	Cu			
	TN	Cu Ni44			
E (Chromel-Constantan)	EP	Ni Cr10			
	EN	Cu Ni44			

Standard of Reference

- European standard IEC 584
- American standard ANSI MC 96.1

ZONZEN

Mineral Insulated Thermocouple Cable

Feature

- Mineral insulated cables are the industry standard, provide choice for high temperature probe fabrication
- Bulk MI cable is rugged, inexpensive, reliable, widely accepted by industry, and readily available in standard configurations, the metal sheath provides a self-armoured cable, which is mechanically robust even at small diameters
- The small mass and high thermal conductivity of a properly made cable promotes rapid response of the finished thermocouple assembly
- Sheath materials can be selected to offer strong resistance against corrosive environments and extremely high temperature effects

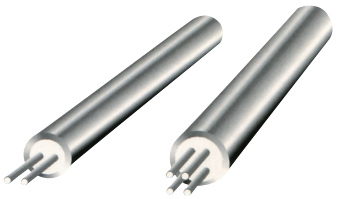

Sheath Specification

Sheath Material	Nominal Chemical Composition (% Weight)										Continuous Max. Temp.	Melting Temp.
	Fe	Ni	Cr	C	Mo	Mn	S	Si	Cu	Tensile		
				Max		Max	Max	Max	0.1	(1000 psi)		
SUS304	Bal	10	19	0.03		2	0.03	1	0.1	80	900℃	1400℃
SUS316	Bal	12	17	0.03	2	2	0.03	1	0.1	85	925℃	1370℃
SUS316L	Bal	12	17	0.03	2	2	0.03	1	0.1	80	925℃	1370℃
SUS310	Bal	20	25	0.08		2	0.03	1.5	0.1	100	1100℃	1400℃

Sheath OD (mm)	Wall Thickness (mm)	Wire Dia. (mm)	Length (m/roll)	Sheath Material	Tolerance		
					Calibration	Limits	Temp. Range ℃
1.6	0.16-0.26	0.26-0.36	200	SUS304 SUS316 SUS316L SUS310L INC600	K	1.5℃ or 0.4%t	-40~1000
2.0	0.25-0.35	0.40-0.50	180				
3.0	0.38-0.48	0.50-0.60	80		J		-40~750
3.2	0.48-0.58	0.58-0.68	75				
4.0	0.52-0.62	0.60-0.70	70		E		-40~800
4.8	0.73-0.83	0.75-0.85	40				
6.0	0.98-1.08	0.90-1.10	30		T	0.5℃ or 0.4%t	-40~350

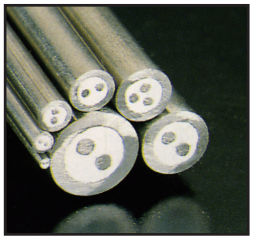

Mineral Insulated Thermocouple Cable

Order Code

Calibration (Order Code)				Sheath OD (mm)	Sheath Material
Type K	Type J	Type E	Type T		
MIC-K-φ1.6-304	MIC-J-φ1.6-304	MIC-E-φ1.6-304	MIC-T-φ1.6-304	1.6	304
MIC-K-φ1.6-316	MIC-J-φ1.6-316	MIC-E-φ1.6-316	MIC-T-φ1.6-316	1.6	316
MIC-K-φ1.6-316L	MIC-J-φ1.6-316L	MIC-E-φ1.6-316L	MIC-T-φ1.6-316L	1.6	316L
MIC-K-φ1.6-310S	-	-	-	1.6	310S
MIC-K-φ2-304	MIC-J-φ2-304	MIC-E-φ2-304	MIC-T-φ2-304	2	304
MIC-K-φ2-316	MIC-J-φ2-316	MIC-E-φ2-316	MIC-T-φ2-316	2	316
MIC-K-φ2-316L	MIC-J-φ2-316L	MIC-E-φ2-316L	MIC-T-φ2-316L	2	316L
MIC-K-φ2-310S	-	-	-	2	310S
MIC-K-φ3-304	MIC-J-φ3-304	MIC-E-φ3-304	MIC-T-φ3-304	3	304
MIC-K-φ3-316	MIC-J-φ3-316	MIC-E-φ3-316	MIC-T-φ3-316	3	316
MIC-K-φ3-316L	MIC-J-φ3-316L	MIC-E-φ3-316L	MIC-T-φ3-316L	3	316L
MIC-K-φ3-310S	-	-	-	3	310S
MIC-K-φ3.2-304	MIC-J-φ3.2-304	MIC-E-φ3.2-304	MIC-T-φ3.2-304	3.2	304
MIC-K-φ3.2-316	MIC-J-φ3.2-316	MIC-E-φ3.2-316	MIC-T-φ3.2-316	3.2	316
MIC-K-φ3.2-316L	MIC-J-φ3.2-316L	MIC-E-φ3.2-316L	MIC-T-φ3.2-316L	3.2	316L
MIC-K-φ3.2-310S	-	-	-	3.2	310S
MIC-K-φ4.8-304	MIC-J-φ4.8-304	MIC-E-φ4.8-304	MIC-T-φ4.8-304	4.8	304
MIC-K-φ4.8-316	MIC-J-φ4.8-316	MIC-E-φ4.8-316	MIC-T-φ4.8-316	4.8	316
MIC-K-φ4.8-316L	MIC-J-φ4.8-316L	MIC-E-φ4.8-316L	MIC-T-φ4.8-316L	4.8	316L
MIC-K-φ4.8-310S	-	-	-	4.8	310S
MIC-K-φ6.0-304	MIC-J-φ6.0-304	MIC-E-φ6.0-304	MIC-T-φ6.0-304	6.0	304
MIC-K-φ6.0-316	MIC-J-φ6.0-316	MIC-E-φ6.0-316	MIC-T-φ6.0-316	6.0	316
MIC-K-φ6.0-316L	MIC-J-φ6.0-316L	MIC-E-φ6.0-316L	MIC-T-φ6.0-316L	6.0	316L
MIC-K-φ6.0-310S	-	-	-	6.0	310S
MIC-K-φ6.4-304	MIC-J-φ6.4-304	MIC-E-φ6.4-304	MIC-T-φ6.4-304	6.4	304
MIC-K-φ6.4-316	MIC-J-φ6.4-316	MIC-E-φ6.4-316	MIC-T-φ6.4-316	6.4	316
MIC-K-φ6.4-316L	MIC-J-φ6.4-316L	MIC-E-φ6.4-316L	MIC-T-φ6.4-316L	6.4	316L
MIC-K-φ6.4-310S	-	-	-	6.4	310S
MIC-K-φ8.0-304	MIC-J-φ8.0-304	MIC-E-φ8.0-304	MIC-T-φ8.0-304	8.0	304
MIC-K-φ8.0-316	MIC-J-φ8.0-316	MIC-E-φ8.0-316	MIC-T-φ8.0-316	8.0	316
MIC-K-φ8.0-316L	MIC-J-φ8.0-316L	MIC-E-φ8.0-316L	MIC-T-φ8.0-316L	8.0	316L
MIC-K-φ8.0-310S	-	-	-	8.0	310S

Order Example

- MIC-K-φ3.0-316, it means you order MI thermocouple cable is simplex, type K, sheath dia: 3.0mm, sheath material: SUS316
- If you order MI thermocouple cable is duplex, please change “MIC” to “MICD”, it means “MICD-K-φ3.0-316”
- If you order MI thermocouple cable is triplex, please change “MIC” to “MICT”, it means “MICT-K-φ3.0-316”

ZONZEN

Mineral Insulated RTD Cable

Feature

- Available in copper or nickel conductors
- 3, 4 or 6 cores
- Sheath material: SUS304, SUS316, SUS316L
- 99.4% high purity MgO insulation
- Wider spacing available
- Cable diameters currently available (in mm): 3.0, 3.2, 4.0, 4.8, 5.0, 6.0, 6.4, 8.0



Specification

Sheath OD (mm)	Wall Thickness (mm)	Ni Wire Dia. (mm)	Length (m/roll)	Sheath Material
3.0	0.38-0.48	0.38-0.42	80	SUS304 SUS316 SUS316L
3.2	0.48-0.58	0.39-0.43	75	
4.0	0.52-0.62	0.50-0.60	70	
4.8	0.73-0.83	0.58-0.68	40	
5.0	0.78-0.88	0.60-0.70	40	
6.0	0.98-1.08	0.70-0.80	30	
6.4	1.05-1.15	0.73-0.83	25	
8.0	1.30-1.44	0.80-1.10	20	

Order Code

Order Code	Wire Calibration	Conductors	Conductor Materials	Sheath OD (mm)	Sheath Material
MIR-NI-4W-φ3.0-304	RTD	4	Ni	3.0	304
MIR-NI-4W-φ3.0-316		4	Ni	3.0	316
MIR-NI-4W-φ3.0-316L		4	Ni	3.0	316L
MIR-NI-4W-φ3.2-304		4	Ni	3.2	304
MIR-NI-4W-φ3.2-316		4	Ni	3.2	316
MIR-NI-4W-φ3.2-316L		4	Ni	3.2	316L
MIR-NI-4W-φ4.0-304		4	Ni	4.0	304
MIR-NI-4W-φ4.0-316		4	Ni	4.0	316
MIR-NI-4W-φ4.0-316L		4	Ni	4.0	316L
MIR-NI-4W-φ4.8-304		4	Ni	4.8	304
MIR-NI-4W-φ4.8-316		4	Ni	4.8	316
MIR-NI-4W-φ4.8-316L		4	Ni	4.8	316L
MIR-NI-4W-φ5.0-304		4	Ni	5.0	304
MIR-NI-4W-φ5.0-316		4	Ni	5.0	316
MIR-NI-4W-φ5.0-316L		4	Ni	5.0	316L
MIR-NI-4W-φ6.0-304		4	Ni	6.0	304
MIR-NI-4W-φ6.0-316		4	Ni	6.0	316
MIR-NI-4W-φ6.0-316L		4	Ni	6.0	316L
MIR-NI-4W-φ6.4-304		4	Ni	6.4	304
MIR-NI-4W-φ6.4-316		4	Ni	6.4	316
MIR-NI-4W-φ6.4-316L		4	Ni	6.4	316L
MIR-NI-4W-φ8.0-304		4	Ni	8.0	304
MIR-NI-4W-φ8.0-316		4	Ni	8.0	316
MIR-NI-4W-φ8.0-316L		4	Ni	8.0	316L

Order Example

- If you order copper conductor, please change the order code to “MIR-CU-4W-φ6.0-316”
- If you order three conductors, please change the order code to “MIR-NI-3W-φ6.0-316”
- If you order six conductor, please change the order code to “MIR-NI-6W-φ6.0-316”



ZONZEN

Screw Type Thermocouple



ZZ-ST01

Dimensions



Specification

Calibration	K, J
Conductor Dia.	2*7/0.2mm, 2*1/0.5mm, 2*7/0.3mm, 2*1/0.8mm
Construction	Parallel, Flat
Insulation & Shield	FB-SSB, FB-FB-SSB
Accuracy	Class 1
Hot Junction	Grounded, Ungrounded
Temp.Range	0-480℃
Lead Wire Length	1M-10M
Screw Size	W1/4, W5/16, M6, M8
Screw Material	Stainless Steel, Copper Plating Nickel

Bayonet Spring Thermocouple



ZZ-BST01

Dimensions

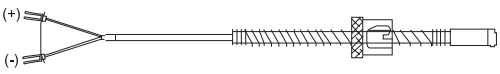

Specification

Calibration	K, J
Conductor Dia.	2*7/0.2mm, 2*1/0.5mm, 2*7/0.3mm, 2*1/0.8mm
Construction	Parallel, Flat
Insulation & Shield	FB-SSB, FB-FB-SSB
Accuracy	Class 1
Hot Junction	Grounded, Ungrounded
Temp.Range	0-480℃
Lead Wire Length	1m-10m
Bayonet Cap ID	12.40mm
Bayonet Slot	1 or 2
To Suit Spring Dia.	5mm
Probe Tube Dia.	4.8mm
Probe Tube Length	15mm-30mm
Material of Bayonet, Spring & Adaptor	Copper Plating Nickel

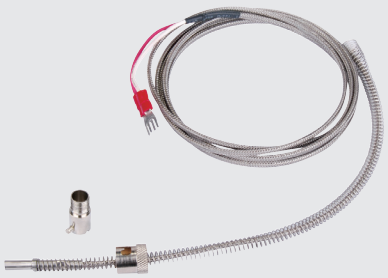

ZZ-BST02



ZZ-BST03

Probe Tube Thermocouple



ZZ-PT01

Dimensions

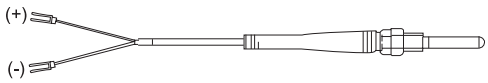

Specification

Calibration	K, J
Conductor Dia.	2*7/0.2mm, 2*1/0.5mm, 2*7/0.3mm, 2*1/0.8mm
Construction	Parallel, Flat
Insulation & Shield	FB-SSB, FB-FB-SSB
Accuracy	Class 1
Hot Junction	Grounded, Ungrounded
Temp.Range	0-480℃
Lead Wire Length	1m-10m
Probe Tube Dia.	5.0mm
Probe Tube Length	100mm-300mm
Material of Probe Tube	Stainless Steel



ZZ-PT02



ZZ-PT03

Armour SS Tube Thermocouple



ZZ-AST01



ZZ-AST02

Specification

Calibration	K, J
Conductor Dia.	2*7/0.2mm, 2*1/0.5mm, 2*7/0.3mm, 2*1/0.8mm
Construction	Parallel, Flat
Insulation & Shield	FB-SSB, FB-FB-SSB
Accuracy	Class 1
Hot Junction	Grounded, Ungrounded
Temp.Range	0-480℃
Lead Wire Length	1m -10m
Probe Tube Dia.	4.8mm
Probe Tube Length	100mm-300mm
Material of Probe tube	Stainless steel
Armour Stainless steel tube dia.	OD:6.8mm, ID:4.8mm
Armour Stainless steel tube length	1m - 3m

ZONZEN

Miniature Connector

Application Connector for thermocouple and RTD circuits. Suited for small wires and mineral insulated cables.



Construction
- Thermoplastic body with original thermocouple material pins
- Easy wire connection through sandwich construction
- Polarized pins ensure proper connection
- Oversize screw head for easy wiring

Wire Size
- Accepts wires from 0.2 mm to 0.8 mm
- Maximum cable diameter 4.5 mm

Max. Temperature
- 200℃ for thermoplastic body
- 650℃ for ceramic body

Calibration & Color Code

Calibration	J	K	T	E
Material Positive	Fe	NiCr	Cu	NiCr
Material Negative	CuNi	NiAl	CuNi	CuNi
ANSI Color Code	Black	Yellow	Blue	Violet
IEC Color Code	Black	Green	Brown	Violet
JIS Color Code	Yellow	Blue	Brown	Violet

Order Code: ZZ-M01	Dimensions
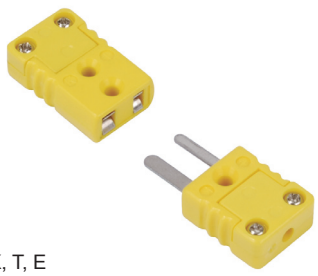 J, K, T, E	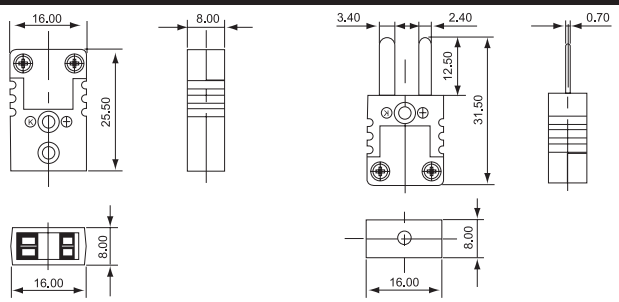

Order Code: ZZ-M02	Dimensions
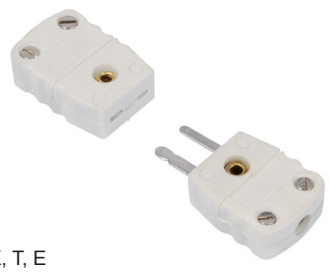 J, K, T, E	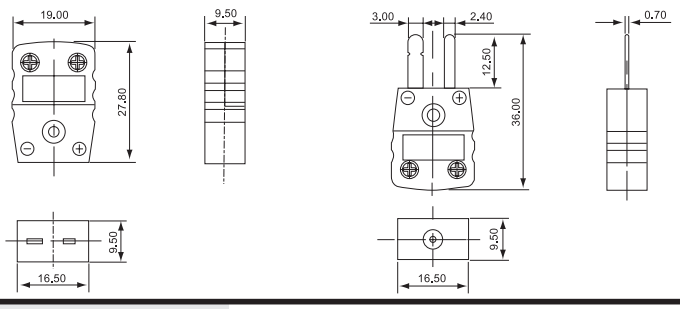

Miniature Connector

Order Code: ZZ-M03	Dimensions
 J, K, T, E	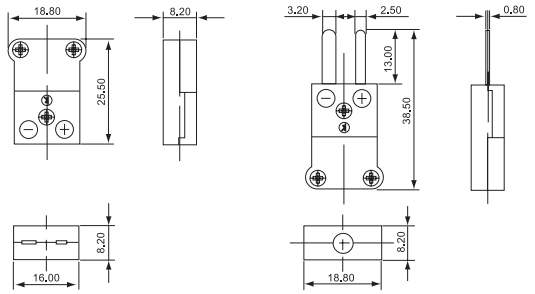

Order Code: ZZ-M04	Dimensions
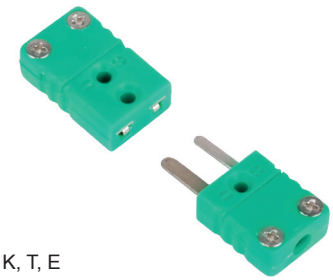 J, K, T, E	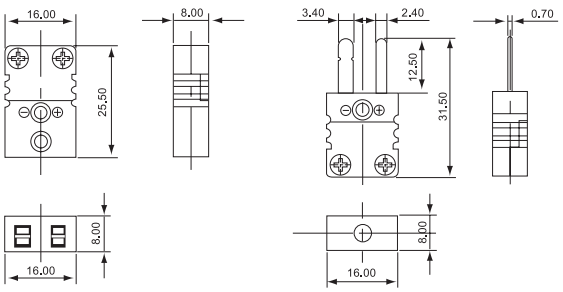

Order Code: ZZ-M05	Dimensions
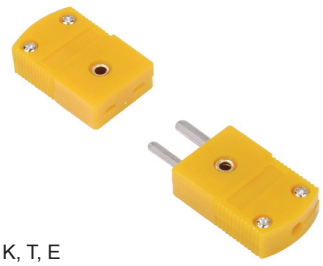 J, K, T, E	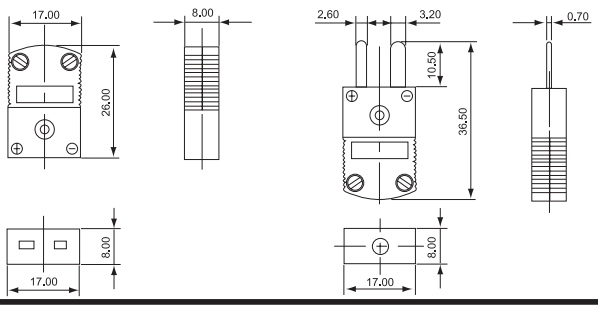

Order Code: ZZ-M06	Dimensions
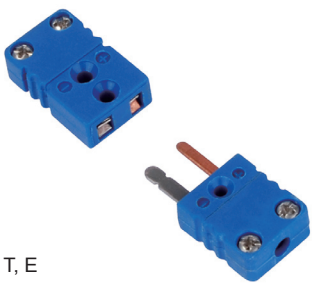 J, K, T, E	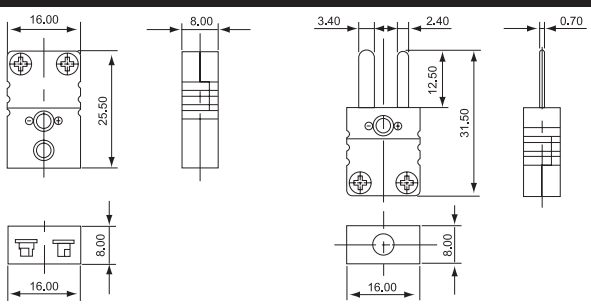

Order Code: ZZ-M07	Dimensions
 J, K, T, E	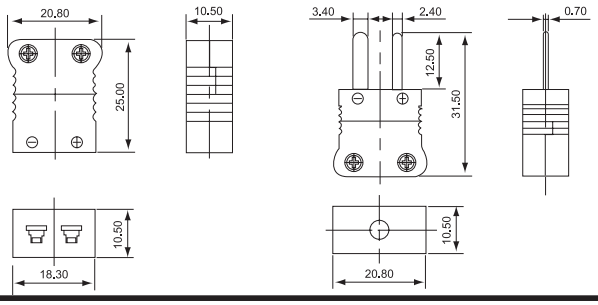

ZONZEN

Standard Connector

Application Connector for thermocouple and RTD circuits. Solid pin design ensures good contact even in demanding applications.



Construction

- Ceramic body with original thermocouple material pins and springloaded inserts
- Polarized pins ensure proper connection
- Central cover screw design for quick wiring
- Molded barriers prevent short circuit
- Captive cover screw for easy assembly

Wire Size

- Accepts wires from 0.2 mm to 2.0 mm
- Maximum cable diameter 8.0 mm

Max. Temperature

- 200℃ for thermoplastic body
- 650℃ for ceramic body

Calibration & Color Code

Calibration	J	K	T	E
Material Positive	Fe	NiCr	Cu	NiCr
Material Negative	CuNi	NiAl	CuNi	CuNi
ANSI Color Code	Black	Yellow	Blue	Violet
IEC Color Code	Black	Green	Brown	Violet
JIS Color Code	Yellow	Blue	Brown	Violet

Order Code: ZZ-S01-KX	Dimensions
 J, K, T, E	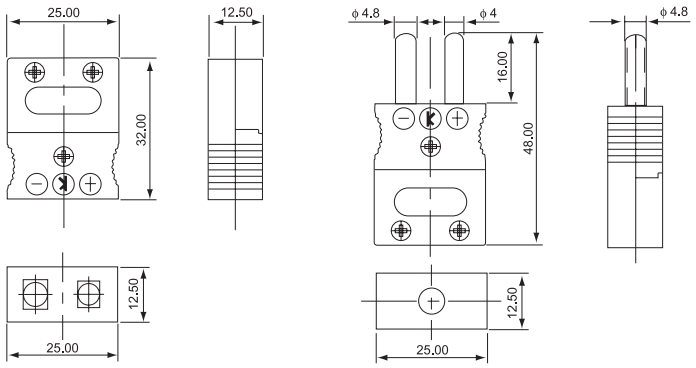

Order Code: ZZ-S01-KC	Dimensions
 J, K, T, E	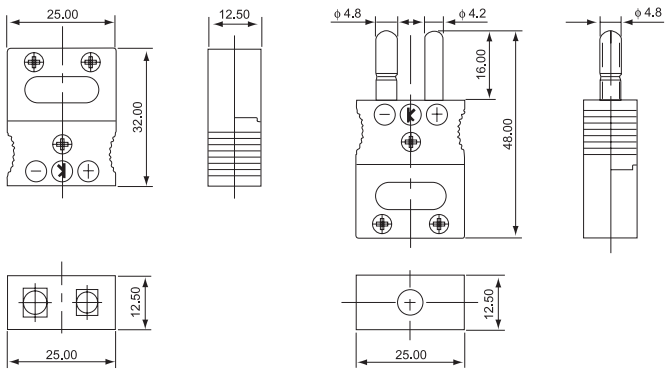

Standard Connector

Order Code: ZZ-S02	Dimensions
 J, K, T, E	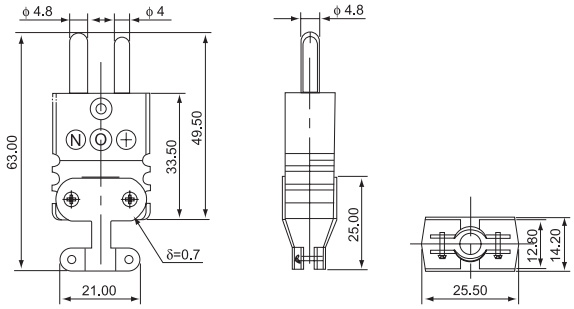

Order Code: ZZ-S03	Dimensions
 J, K, T, E	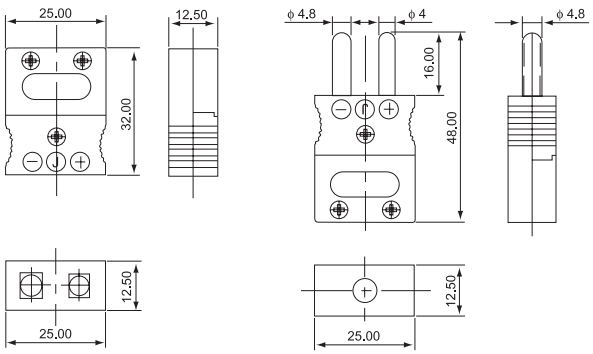

Order Code: ZZ-S04	Dimensions
 J, K, T, E	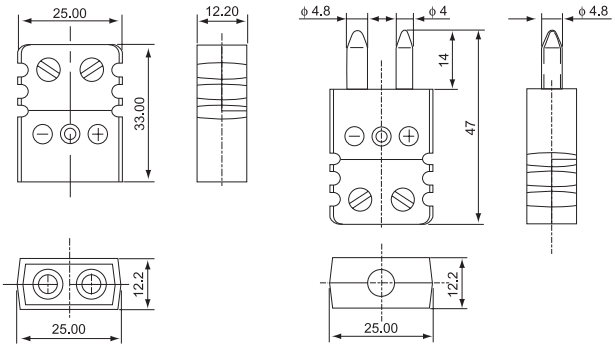

Order Code: ZZ-S05	Dimensions
 J, K, T, E	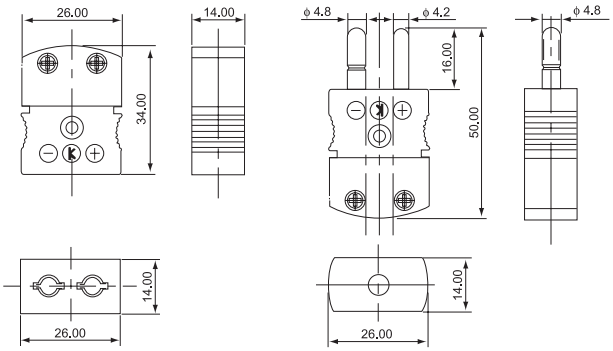

Standard Connector

Order Code: ZZ-S06	Dimensions
 J, K, T, E	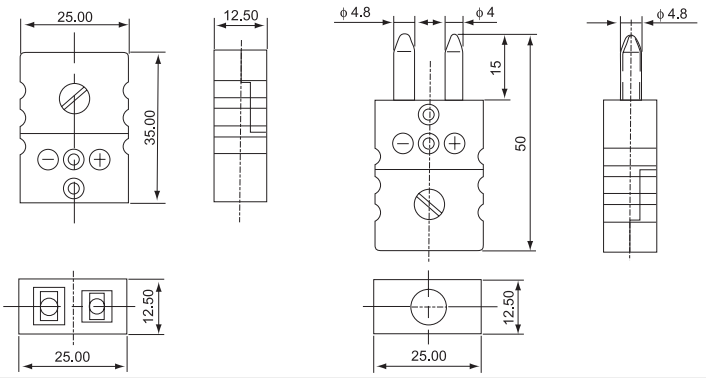

Order Code: ZZ-S07	Dimensions
 J, K, T, E	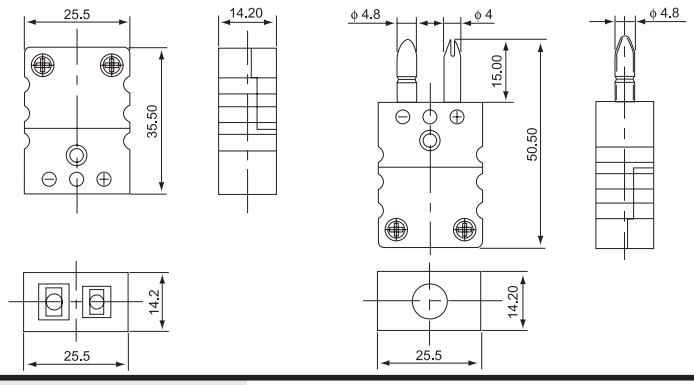

Order Code: ZZ-S08	Dimensions
 J, K, T, E	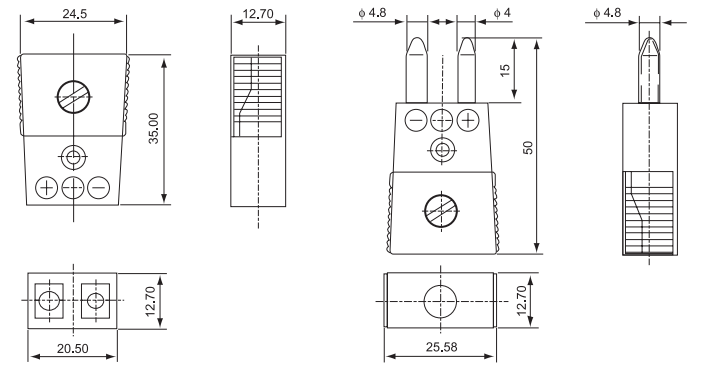

Order Code: ZZ-S09	Dimensions
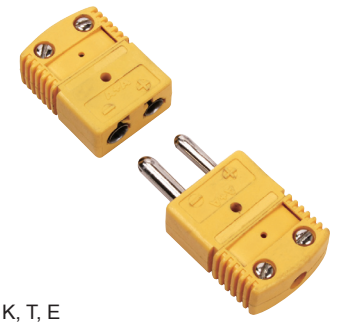 J, K, T, E	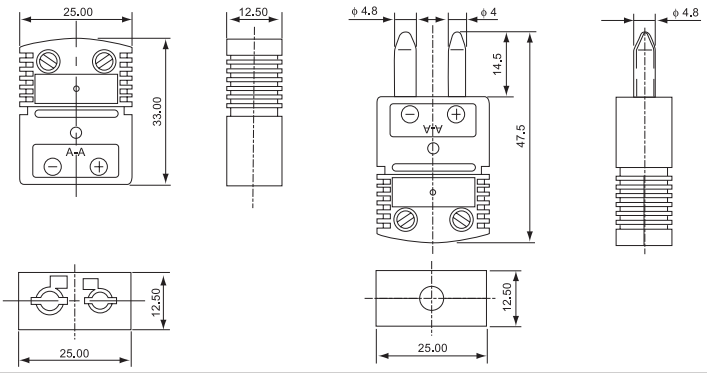

KNE Thermocouple Head



SS304, SS316 is available

Dimensions

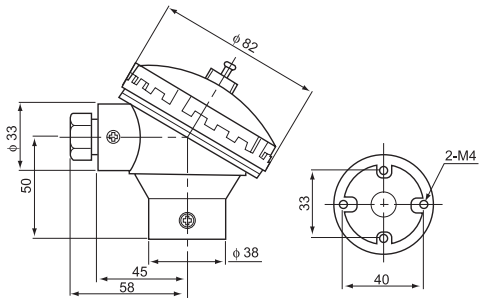

Specification

Material	Alloy-Aluminum, KNE Weight 274g
Protection Tube Entry	PF1/2", PF3/4", NPT3/4", BSP1/2", BSP3/4", M20×1.5
Extension Wire Entry	PF1/2", PF3/4", NPT3/4", BSP1/2", BSP3/4", M20×1.5
Material of Terminal Block	Ceramic, Bakelite
Form of Terminal Block	2P-C, 3P-C, 4P-C, 6P-C 2P-B, 3P-B, 4P-B, 6P-B
Available Color	Silvery, Yellow, Red, Blue, Purple, Black
Approval IEC529	IP65

2P-C	2P-B	Terminal Blocks for Connection Heads	Dimensions
		2P-C Material: Ceramic Terminal Block Weight: 68g 2P-B Material: Bakelite Terminal Block Weight: 56g	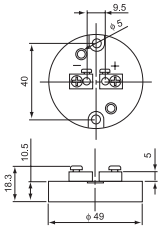

3P-C	3P-B	Terminal Blocks for Connection Heads	Dimensions
		3P-C Material: Ceramic Terminal Block Weight: 82g 3P-B Material: Bakelite Terminal Block Weight: 70g	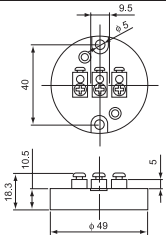

4P-C	4P-B	Terminal Blocks for Connection Heads	Dimensions
		4P-C Material: Ceramic Terminal Block Weight: 100g 4P-B Material: Bakelite Terminal Block Weight: 84g	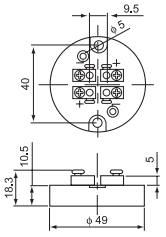

6P-C	6P-B	Terminal Blocks for Connection Heads	Dimensions
		6P-C Material: Ceramic Terminal Block Weight: 80g 6P-B Material: Bakelite Terminal Block Weight: 70g	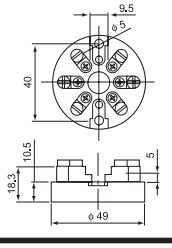

ZONZEN

KSE Thermocouple Head



Dimensions

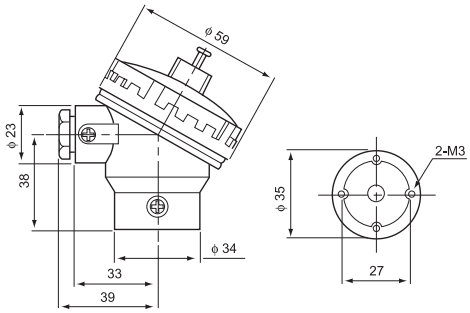

Specification

Material	Alloy-Aluminum, KSE Weight 144g
Protection Tube Entry	PF1/2", PF1/4", BSP1/2", BSP1/4"
Extension Wire Entry	PF3/8", BSP3/8"
Material of Terminal Block	Ceramic, Bakelite
Form of Terminal Block	2P-C, 3P-C, 4P-C 2P-B, 3P-B, 4P-B
Available Color	Silvery, Yellow, Red, Blue, Purple, Black
Approval IEC529	IP65

2P-C	2P-B	Terminal Blocks for Connection Heads	Dimensions
		2P-C Material: Ceramic Terminal Block Weight: 30g 2P-B Material: Bakelite Terminal Block Weight: 24g	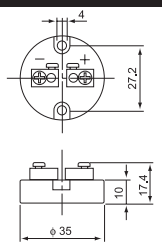

3P-C	3P-B	Terminal Blocks for Connection Heads	Dimensions
		3P-C Material: Ceramic Terminal Block Weight: 28g 3P-B Material: Bakelite Terminal Block Weight: 24g	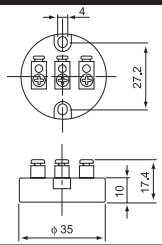

4P-C	4P-B	Terminal Blocks for Connection Heads	Dimensions
		4P-C Material: Ceramic Terminal Block Weight: 36g 4P-B Material: Bakelite Terminal Block Weight: 28g	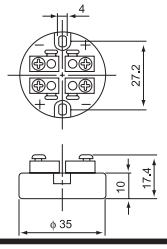

KB Thermocouple Head



Dimensions

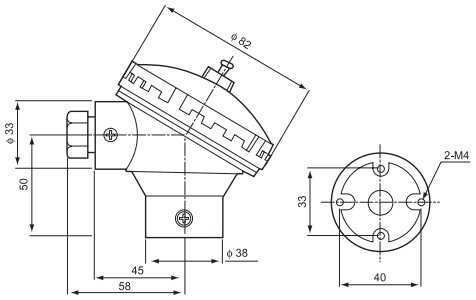

Specification

Material	Bakelite, KB Weight 145g
Protection Tube Entry	PF1/2"
Extension Wire Entry	PF1/2"
Material of Terminal Block	Ceramic, Bakelite
Form of Terminal Block	2P-C, 3P-C, 4P-C, 6P-C 2P-B, 3P-B, 4P-B, 6P-B
Available Color	Black
Approval IEC529	IP65

2P-C	2P-B	Terminal Blocks for Connection Heads	Dimensions
		2P-C Material: Ceramic Terminal Block Weight: 68g 2P-B Material: Bakelite Terminal Block Weight: 56g	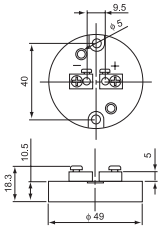

3P-C	3P-B	Terminal Blocks for Connection Heads	Dimensions
		3P-C Material: Ceramic Terminal Block Weight: 82g 3P-B Material: Bakelite Terminal Block Weight: 70g	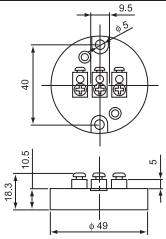

4P-C	4P-B	Terminal Blocks for Connection Heads	Dimensions
		4P-C Material: Ceramic Terminal Block Weight: 100g 4P-B Material: Bakelite Terminal Block Weight: 84g	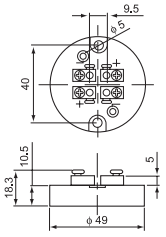

6P-C	6P-B	Terminal Blocks for Connection Heads	Dimensions
		6P-C Material: Ceramic Terminal Block Weight: 80g 6P-B Material: Bakelite Terminal Block Weight: 70g	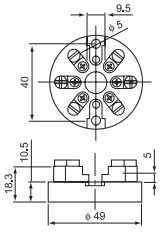

KBS Thermocouple Head



Dimensions

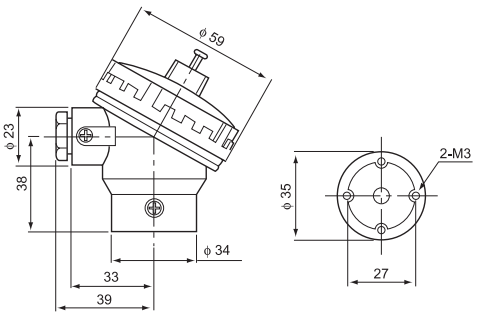

Specification

Material	Bakelite, KBS Weight 82g
Protection Tube Entry	PF1/4"
Extension Wire Entry	PF3/8"
Material of Terminal Block	Ceramic, Bakelite
Form of Terminal Block	2P-C, 3P-C, 4P-C 2P-B, 3P-B, 4P-B
Available Color	Black
Approval IEC529	IP65

2P-C	2P-B	Terminal Blocks for Connection Heads	Dimensions
		2P-C Material: Ceramic Terminal Block Weight: 30g 2P-B Material: Bakelite Terminal Block Weight: 24g	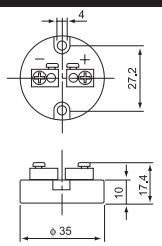

3P-C	3P-B	Terminal Blocks for Connection Heads	Dimensions
		3P-C Material: Ceramic Terminal Block Weight: 28g 3P-B Material: Bakelite Terminal Block Weight: 24g	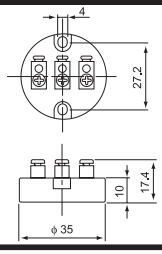

4P-C	4P-B	Terminal Blocks for Connection Heads	Dimensions
		4P-C Material: Ceramic Terminal Block Weight: 36g 4P-B Material: Bakelite Terminal Block Weight: 28g	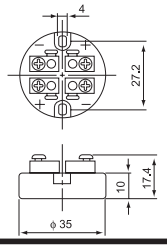

KNC Thermocouple Head



Dimensions

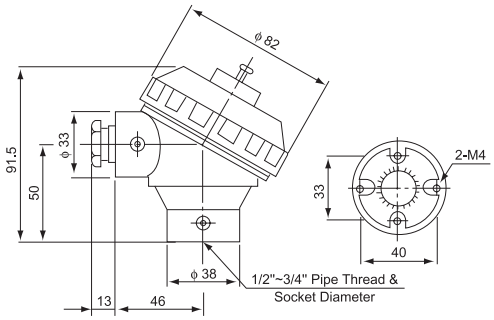

Specification

Material	Alloy-Aluminum, KNC Weight 264g
Protection Tube Entry	PF1/2", PF3/4", NPT3/4", BSP1/2", BSP3/4", M20×1.5
Extension Wire Entry	PF1/2", PF3/4", NPT3/4", BSP1/2", BSP3/4", M20×1.5
Material of Terminal Block	Ceramic, Bakelite
Form of Terminal Block	2P-C, 3P-C, 4P-C, 6P-C 2P-B, 3P-B, 4P-B, 6P-B
Available Color	Silvery, Yellow, Red, Blue, Purple, Black
Approval IEC529	IP65

2P-C	2P-B	Terminal Blocks for Connection Heads	Dimensions
		2P-C Material: Ceramic Terminal Block Weight: 68g 2P-B Material: Bakelite Terminal Block Weight: 56g	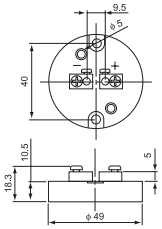

3P-C	3P-B	Terminal Blocks for Connection Heads	Dimensions
		3P-C Material: Ceramic Terminal Block Weight: 82g 3P-B Material: Bakelite Terminal Block Weight: 70g	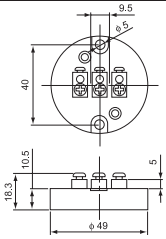

4P-C	4P-B	Terminal Blocks for Connection Heads	Dimensions
		4P-C Material: Ceramic Terminal Block Weight: 100g 4P-B Material: Bakelite Terminal Block Weight: 84g	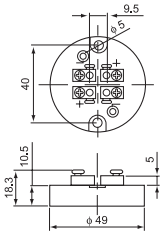

6P-C	6P-B	Terminal Blocks for Connection Heads	Dimensions
		6P-C Material: Ceramic Terminal Block Weight: 80g 6P-B Material: Bakelite Terminal Block Weight: 70g	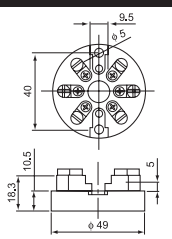

KSC Thermocouple Head



Dimensions

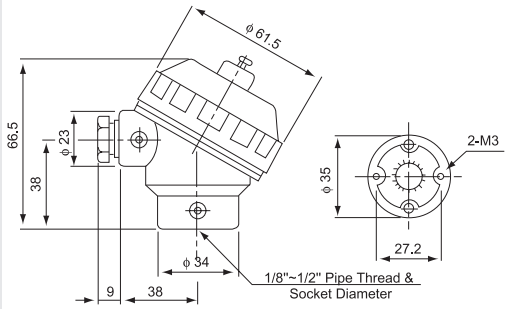

Specification

Material	Alloy-Aluminum, KSC Weight 140g
Protection Tube Entry	PF1/2", PF1/4", BSP1/2", BSP1/4"
Extension Wire Entry	PF3/8", BSP3/8"
Material of Terminal Block	Ceramic, Bakelite
Form of Terminal Block	2P-C, 3P-C, 4P-C 2P-B, 3P-B, 4P-B
Available Color	Silvery, Yellow, Red, Blue, Purple, Black
Approval IEC529	IP65

2P-C	2P-B	Terminal Blocks for Connection Heads	Dimensions
		2P-C Material: Ceramic Terminal Block Weight: 30g 2P-B Material: Bakelite Terminal Block Weight: 24g	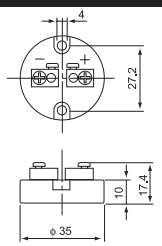

3P-C	3P-B	Terminal Blocks for Connection Heads	Dimensions
		3P-C Material: Ceramic Terminal Block Weight: 28g 3P-B Material: Bakelite Terminal Block Weight: 24g	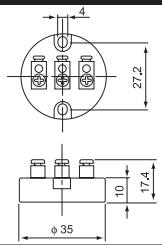

4P-C	4P-B	Terminal Blocks for Connection Heads	Dimensions
		4P-C Material: Ceramic Terminal Block Weight: 36g 4P-B Material: Bakelite Terminal Block Weight: 28g	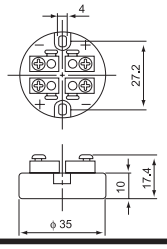

KD Thermocouple Head

Dimensions



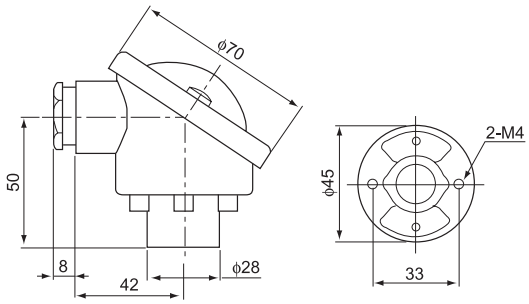

Specification

Material	Alloy-Aluminum, KD Weight 158g
Protection Tube Entry	PF1/2", BSP1/2", NPT1/2", M22×1.5
Extension Wire Entry	M22×1.5
Material of Terminal Block	Ceramic
Form of Terminal Block	2P-C, 3P-C, 4P-C, 6P-C
Available Color	Silvery, Yellow, Red, Blue
Approval IEC529	IP65

2P-C	Terminal Blocks for Connection Heads	Dimensions
	2P-C Material: Ceramic Terminal Block Weight: 60g	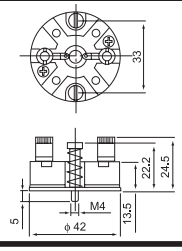

3P-C	Terminal Blocks for Connection Heads	Dimensions
	3P-C Material: Ceramic Terminal Block Weight: 66g	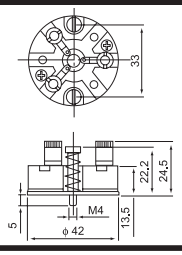

4P-C	Terminal Blocks for Connection Heads	Dimensions
	4P-C Material: Ceramic Terminal Block Weight: 72g	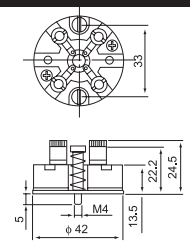

6P-C	Terminal Blocks for Connection Heads	Dimensions
	6P-C Material: Ceramic Terminal Block Weight: 84g	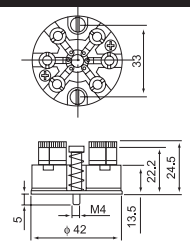

KF Thermocouple Head



Dimensions

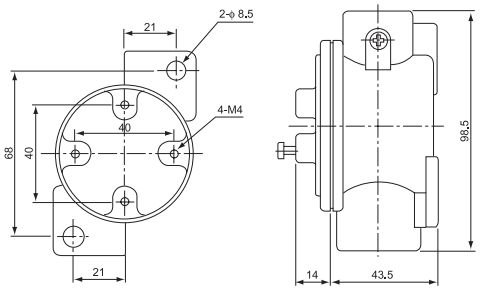

Specification

Material	Alloy-Aluminum, KF Weight 238g
Protection Tube Entry	PF3/4", NPT3/4"
Extension Wire Entry	PF1/2", NPT1/2"
Material of Terminal Block	Bakelite
Form of Terminal Block	2P-B, 3P-B, 4P-B, 6P-B
Available Color	Black
Approval IEC529	IP65

2P-B	Terminal Blocks for Connection Heads	Dimensions
	2P-B Material: Bakelite Terminal Block Weight: 56g	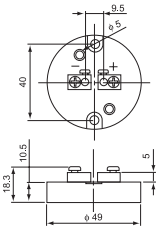

3P-B	Terminal Blocks for Connection Heads	Dimensions
	3P-B Material: Bakelite Terminal Block Weight: 70g	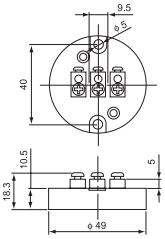

4P-B	Terminal Blocks for Connection Heads	Dimensions
	4P-B Material: Bakelite Terminal Block Weight: 84g	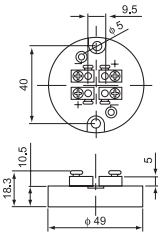

6P-B	Terminal Blocks for Connection Heads	Dimensions
	6P-B Material: Bakelite Terminal Block Weight: 70g	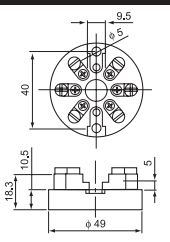

KG Thermocouple Head



Dimensions

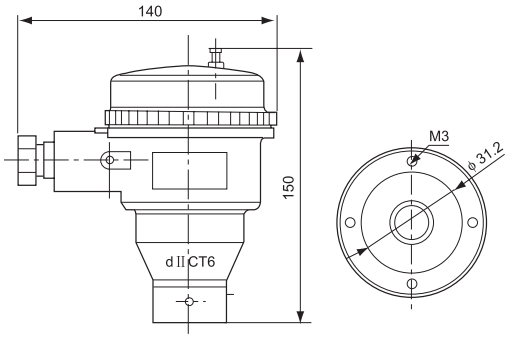

Specification

Material	Alloy-Aluminum or SS304
Protection Tube Entry	M22×1.5
Extension Wire Entry	M20×1.5
Material of Terminal Block	Bakelite
Form of Terminal Block	2P-B, 3P-B, 4P-B, 6P-B
Available Color	Silver
Approval IEC529	IP65

2P-B	Terminal Blocks for Connection Heads	Dimensions
	2P-B Material: Bakelite Terminal Block Weight: 60g	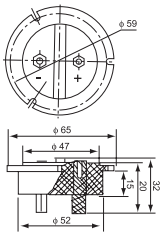

3P-B	Terminal Blocks for Connection Heads	Dimensions
	3P-B Material: Bakelite Terminal Block Weight: 66g	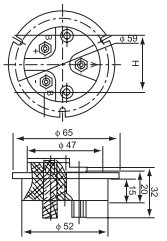

4P-B	Terminal Blocks for Connection Heads	Dimensions
	4P-B Material: Bakelite Terminal Block Weight: 72g	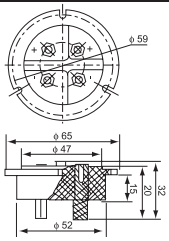

6P-B	Terminal Blocks for Connection Heads	Dimensions
	6P-B Material: Bakelite Terminal Block Weight: 84g	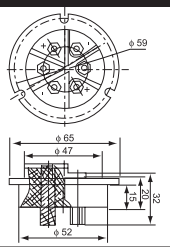

ZONZEN

TL Thermocouple Head

Dimensions



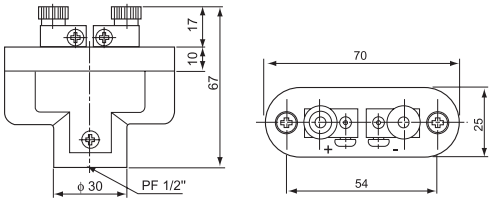

Specification

Material	Alloy-Aluminum, TL Weight 130g
Protection Tube Entry	PF 1/2"
Material of Terminal Block	Ceramic, Bakelite
Form of Terminal Block	2P-C, 2P-B
Available Color	Silver
Approval IEC529	IP65

2P-C	2P-B	Terminal Blocks for Connection Heads	Dimensions
		2P-C Terminal Block Weight: 72g 2P-B Terminal Block Weight: 62g	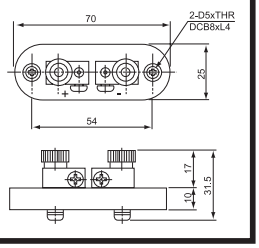

TS Thermocouple Head

Dimensions



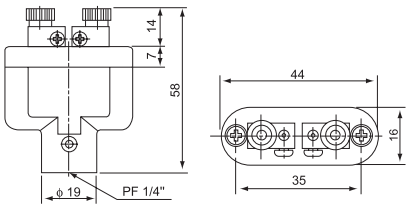

Specification

Material	Alloy-Aluminum, TS Weight 50g
Protection Tube Entry	PF 1/4"
Material of Terminal Block	Ceramic, Bakelite
Form of Terminal Block	2P-C, 2P-B
Available Color	Silver
Approval IEC529	IP 65

2P-C	2P-B	Terminal Blocks for Connection Heads	Dimensions
		2P-C Terminal Block Weight: 28g 2P-B Terminal Block Weight: 24g	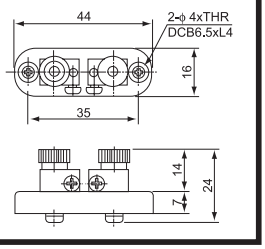

MAA Thermocouple Head

Dimensions



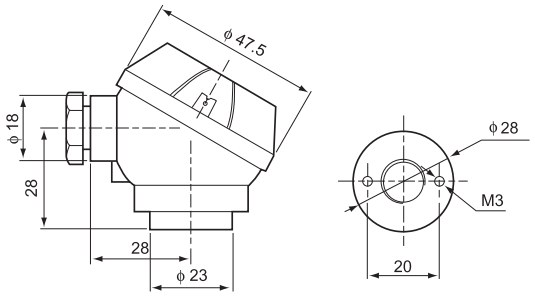

Specification

Material	Alloy-Aluminum, MAA Weight 76g
Protection Tube Entry	M10×1
Extension Wire Entry	M14×1.5
Material of Terminal Block	Ceramic
Form of Terminal Block	2P-C, 3P-C,4P-C
Available Color	Silver, Red, Blue
Approval IEC529	IP65

2P-C	Terminal Blocks for Connection Heads	Dimensions
	2P-C Material: Ceramic Terminal Block Weight: 16g	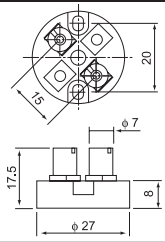

3P-C	Terminal Blocks for Connection Heads	Dimensions
	3P-C Material: Ceramic Terminal Block Weight: 18g	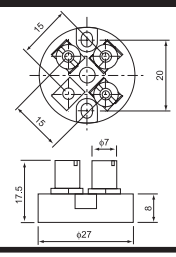

4P-C	Terminal Blocks for Connection Heads	Dimensions
	4P-C Material: Ceramic Terminal Block Weight: 20g	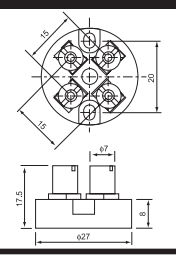

NAA Thermocouple Head



Dimensions

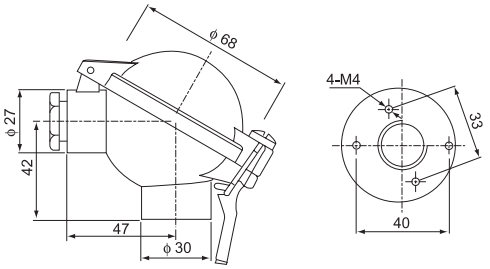

Specification

Material	Alloy-Aluminum, NAA Weight 164g
Protection Tube Entry	PF1/2", NPT1/2", BSP1/2", M20×1.5
Extension Wire Entry	PF1/2", NPT1/2", BSP1/2", M20×1.5
Material of Terminal Block	Ceramic
Form of Terminal Block	2P-C, 3P-C,4P-C, 6P-C
Available Color	Silver, Red, Blue
Approval IEC529	IP65

2P-C	Terminal Blocks for Connection Heads	Dimensions
	2P-C Material: Ceramic Terminal Block Weight: 60g	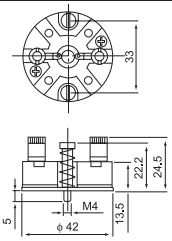

3P-C	Terminal Blocks for Connection Heads	Dimensions
	3P-C Material: Ceramic Terminal Block Weight: 66g	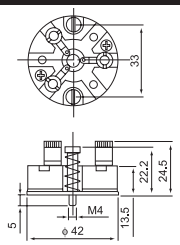

4P-C	Terminal Blocks for Connection Heads	Dimensions
	4P-C Material: Ceramic Terminal Block Weight: 72g	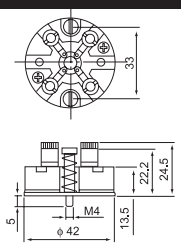

6P-C	Terminal Blocks for Connection Heads	Dimensions
	6P-C Material: Ceramic Terminal Block Weight: 84g	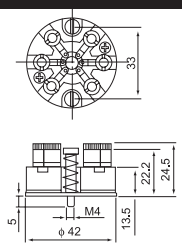

DANA Thermocouple Head

Dimensions



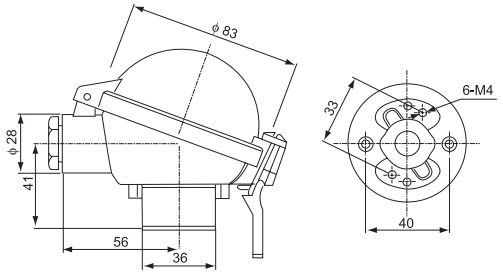

Specification

Material	Alloy-Aluminum, DANA Weight 253g
Protection Tube Entry	PF1/2", PF3/4", NPT1/2", NPT3/4", BSP1/2", BSP3/4", M20×1.5
Extension Wire Entry	PF1/2", PF3/4", NPT1/2", NPT3/4", BSP1/2", BSP3/4", M20×1.5
Material of Terminal Block	Ceramic
Form of Terminal Block	2P-C, 3P-C,4P-C, 6P-C
Available Color	Silver, Red, Blue
Approval IEC529	IP65

2P-C	Terminal Blocks for Connection Heads	Dimensions
	2P-C Material: Ceramic Terminal Block Weight: 68g	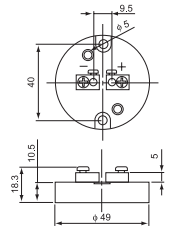

3P-C	Terminal Blocks for Connection Heads	Dimensions
	3P-C Material: Ceramic Terminal Block Weight: 82g	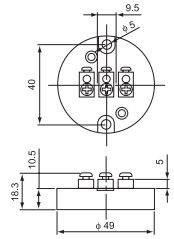

4P-C	Terminal Blocks for Connection Heads	Dimensions
	4P-C Material: Ceramic Terminal Block Weight: 100g	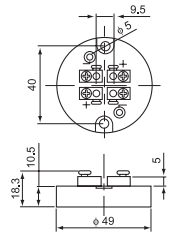

6P-C	Terminal Blocks for Connection Heads	Dimensions
	6P-C Material: Ceramic Terminal Block Weight: 80g	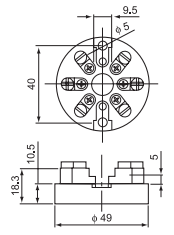

DAAD Thermocouple Head



Dimensions

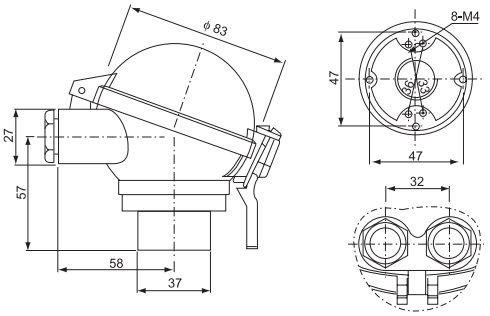

Specification

Material	Alloy-Aluminum, DAAD Weight 390g
Protection Tube Entry	PF1/2", PF3/4", NPT1/2", NPT3/4", BSP1/2", BSP3/4", M20×1.5
Extension Wire Entry	PF1/2", NPT1/2", BSP1/2", M20×1.5
Material of Terminal Block	Ceramic
Form of Terminal Block	2P-C, 3P-C,4P-C, 6P-C
Available Color	Silver, Red, Blue
Approval IEC529	IP65

2P-C	Terminal Blocks for Connection Heads	Dimensions
	2P-C Material: Ceramic Terminal Block Weight: 68g	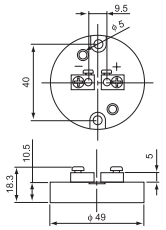

3P-C	Terminal Blocks for Connection Heads	Dimensions
	3P-C Material: Ceramic Terminal Block Weight: 82g	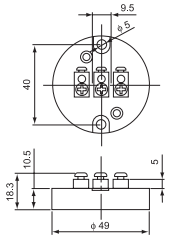

4P-C	Terminal Blocks for Connection Heads	Dimensions
	4P-C Material: Ceramic Terminal Block Weight: 100g	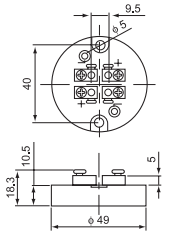

6P-C	Terminal Blocks for Connection Heads	Dimensions
	6P-C Material: Ceramic Terminal Block Weight: 80g	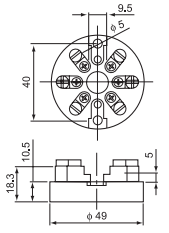

Digital Thermometer (TM6801B)

Features

Digital thermometer provide fast and accurate temperature measurement for a variety of applications. Many different styles of probes are available to suit almost any kind of job in which contact thermomenters are used. Air and gas temperatures, internal food temperatures, and surface temperatures in both industrial and commercial environments can be made using these instruments. Most units are provided with miniature plug connector, a single unit can be used with a variety of probes.



Specification

Model	TM6801B
Temperture Range	0℃~1300℃, 32°F~1999°F
Resolution	0.1℃ or 0.1°F
Accuracy	0℃~1300℃, ± 0.3%rdg +1℃ 32°F~1999°F, ± 0.3%rdg +1°F
Input Signal	K

Digital Thermometer (TM1310)



Specification

Model	TM1310
Temperture Range	0℃~1300℃, 32°F~1999°F
Resolution	0.1℃ or 0.1°F
Accuracy	0℃~1300℃, ± 0.3%rdg +1℃ 32°F~1999°F, ± 0.3%rdg +1°F
Input Signal	K

Digital Thermometer (TM1320)



Specification

Model	TM1320
Temperture Range	0℃~1300℃, 32°F~1999°F
Resolution	0.1℃ or 0.1°F
Accuracy	0℃~1300℃, ± 0.3%rdg +1℃ 32°F~1999°F, ± 0.3%rdg +1°F
Input Signal	K

ZONZEN

Precision Thermometer

Features

80 series hand held digital thermometer with micro PC & 60mm×50mm large LCD display and double 4 1/2-digit display, input signal choice of T1 & T2.

- Logging: Provided with time period programmable
- Input: Thermocouple (K, J, T, E, S, N) / RTD (PT100)
- Accuracy: ±0.3%+0.5℃
- Resolution: 0.1℃, 0.1℉ (< 2000) 1℃, 1℉ (≥ 2000)
- Communication interface: RS232



82 II

Infrared Thermometer

Features

Infrared thermometer is a type of non-contact temperature detector, which are widely used in temperature detection in areas including maintenance of electrical equipments, detection of auto maintenance, food safety inspection, examination of heating spot, heat supply, and communication, refrigeration and fire-prevention operation.



SM580

Specification

Model	SM380	SM580
Temperature Range	-32℃~380℃, -25℉~716℉	-32℃~580℃, -25℉~1076℉
Measurement Accuracy	±2℃ (±4℉)	±2℃ (±4℉)
Repeat Accuracy	±1℃ (±2℉)	±1℃ (±2℉)
Measuring Distance Ratio	12:1	12:1
Resolution	0.1℃ / 0.1℉	0.1℃ / 0.1℉
Emissivity	0.95	0.95

Expendable Thermocouple — Tips

Application

We manufacture a variety of models for various requirements, such as type 602, 604A & 604B. The thermocouple tips are available in a range of calibrations. The junctions are:

- Platinum & Platinum 10% Rhodium (Type S)
- Platinum & Platinum 13% Rhodium (Type R)
- Platinum 6% Rhodium & Platinum 30% Rhodium (Type B)

The Platinum & Platinum alloy wires are housed in a quartz tube capable of withstanding temperatures of up to 1800℃.



602 604A 604B

Technical Data

Order Code	Successful Test Rate	Response Time	Calibration	Tolerance	Max. Temperature
604A 604B	> 98%	2s~5s	S: PtRh 10% --Pt	1.5℃	1760℃
			R: PtRh 13% --Pt	1.5℃	1760℃
			B: PtRh 30% -- PtRh6%	4℃	1820℃
602			W: Wre 3% --Wre 25%	0.25%t	1800℃

Protective Tube	Internal Diameter (ID)	Length	Material
Paper Tube	28.2±0.2mm	As per customer's requirement up to 1800mm	Paper
	19.1±0.2mm		
	18.2±0.2mm		

Protective Cap	Material
Metal Cap	Al
	Cu
	Fe

— Sampler

Application

Spoons are available in a variety of thicknesses and diameters and in 2 distinct shapes, such as Round & Oval double thickness.

Round Simple Thickness	Dimensions	
 Diameter: 32mm Thickness: 12mm	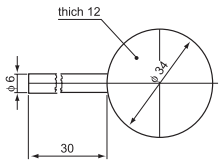	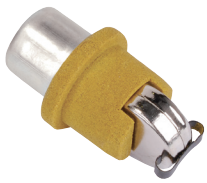

Oval Double Thickness	Dimensions	
 Oval Size: 60mm/32mm Thickness: 12mm/4mm	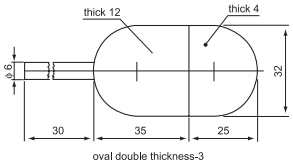	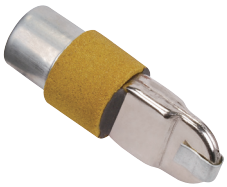

These samplers are available both with and without the deoxidants of Aluminum, Titanium and Zirconium, as per the requirement of the customer.

ZONZEN

Expendable Thermocouple —Contact Block

2 Wires Contact Block for thermocouple type “S” & “R”- ϕ18MM (3/8”)

Specification

① **Negative thermocouple contact**
Type “S” & “R” copper alloy 11, 3.15mm diam

② **Positive thermocouple contact**
Type “S” & “R” pure copper, 9.65mm diam.

③ **External body**
Steel or Copper

④ **Lock hole, 3 mm diam**

⑤ **Connection of the insulating cables**
Red color = - thermocouple signal
Black color = + thermocouple signal
The cotact block is internally filled with an insulating resin

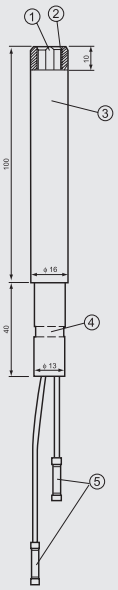

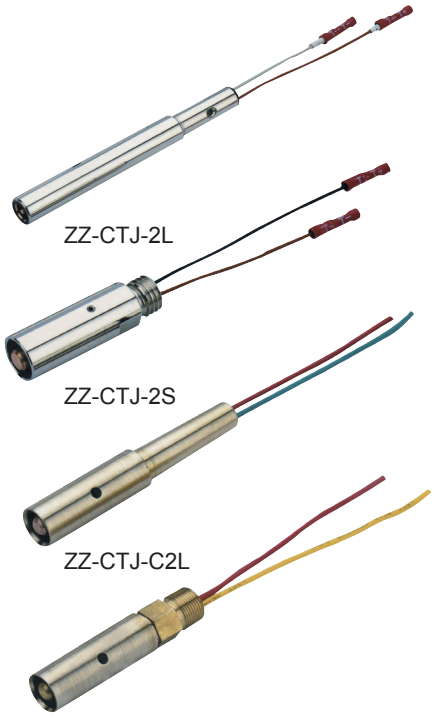

ZZ-CTJ-2L

ZZ-CTJ-2S

ZZ-CTJ-C2L

ZZ-CTJ-C2S

4 Wires Contact Block for thermocouple & oxygen probe type “S” & “R”- ϕ18MM (3/8”)

Specification

① **Negative thermocouple contact**
Type “S” & “R” copper alloy 11, 3.15mm diam

② **Positive thermocouple contact**
Type “S” & “R” pure copper, 9.65mm diam

③ **External body-Higher part (O2 neg. contact)**
Steel

④ **Insulation part**
PTFE material

⑤ **External body-Lower part**
Steel

⑥ **Lock hole, 3 mm diam**

⑦ **Wires cable connection**
Red color = - thermocouple signal
Black color = + thermocouple signal
White color = O2 - signal
Yellow color = O2 + signal
The cotact block is internally filled with an insulating resin

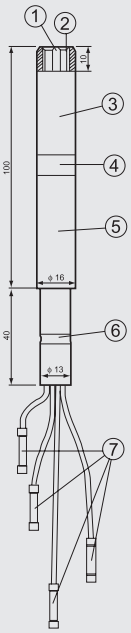



ZZ-CTJ-4S

ZZ-CTJ-4L

Accessories

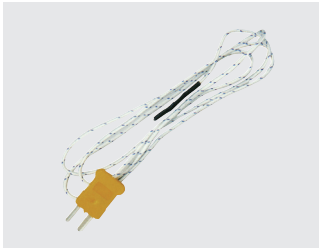

WRN-01B



WRN-01A

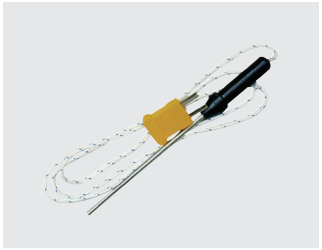

WRN-02B

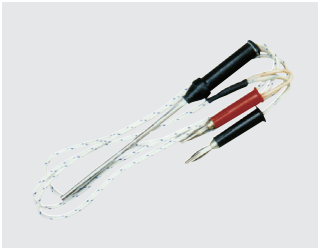

WRN-02A

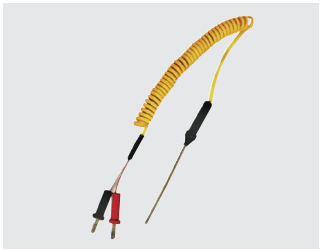

WRN-02A



WRNM-102B



WRN-02C

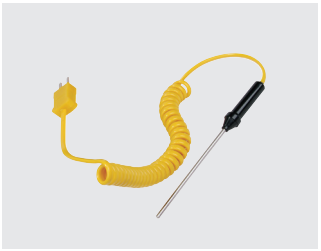

CCP-PT1



WRN4-01B

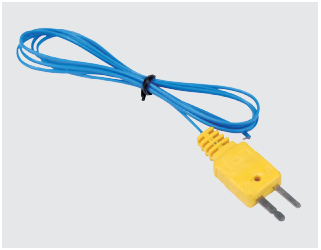

WRN4-02B

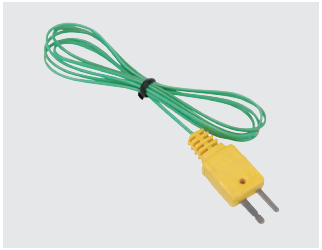

WRN4-03B



NR-39T



WWR-01

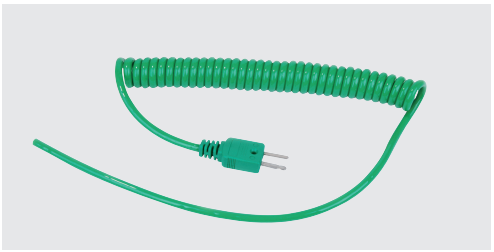

CCP-K1

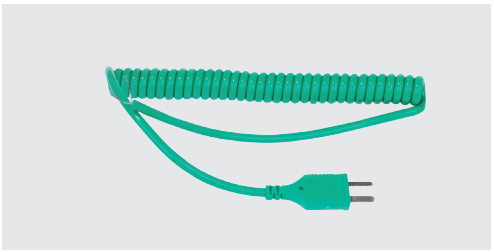

CCP-K2



Bayonet adaptor

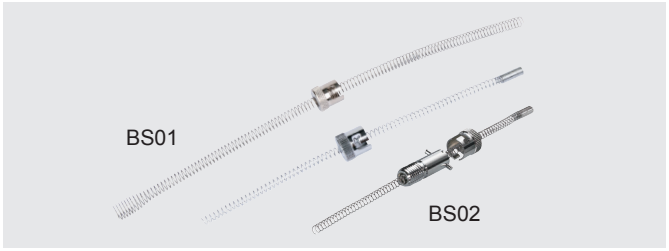

Bayonet spring



Armor flexible tube (SS304)



Connector accessories



Transmitter 01



Transmitter 02



Transmitter 03



NO. 76



NO. 77



NO. 88



NO. 89



NO. 90



NO. 91



NO. 92



NO. 93



NO. 94



NO. 95



NO. 96



NO. 97

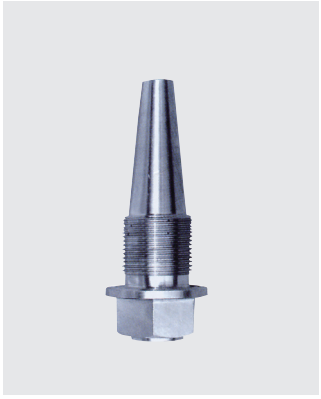

NO. 98



NO. 99



NO. 100



NO. 101

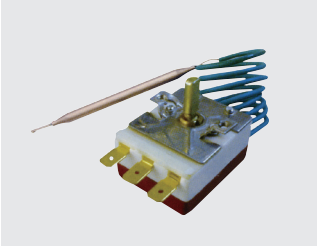
WK-R12


WK-R11

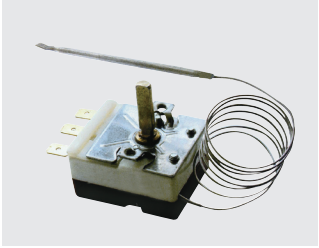
WK-R11 HR


WK-R12 I


WK-R11 I

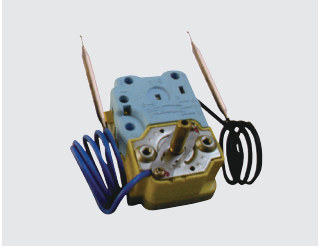
WK-R2-122

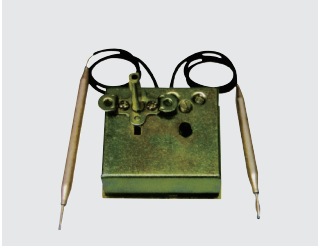
WK-R36


WK-R22 XSD


WK-R22 KSD


WK-R11 XK (For coompressor)

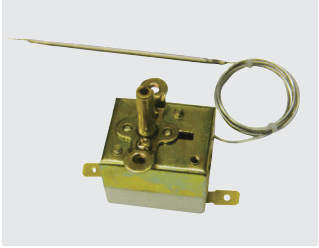
WK-R11 XK

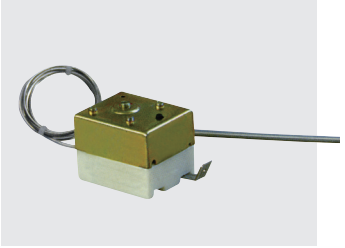
WK-R11 XW

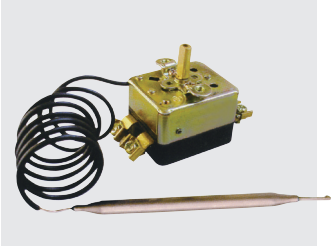
WK-R22 SD


WK-R33


WK-R11-22 P

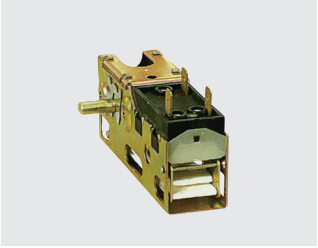
JX1A


YMY40


WTY-100A


WTY-100B


WTY-100B (Three colours)


WTY-100C


WTY-100C


RFT6


WTY-210A

ZONZEN

Zonzen Electric Co., Ltd.

Add.: Guang'an Road, Zhiguang Industrial Zone, Liushi,
Wenzhou, Zhejiang 325604 China.
Tel: 0086-577-6173 1117
Fax: 0086-577-6173 1116
E-mail: zonzen@zonzen.com
Http: // www.zonzen.com